Project : MT6889, LPDDR4X (SBS)
REF_SCH TOP LEVEL

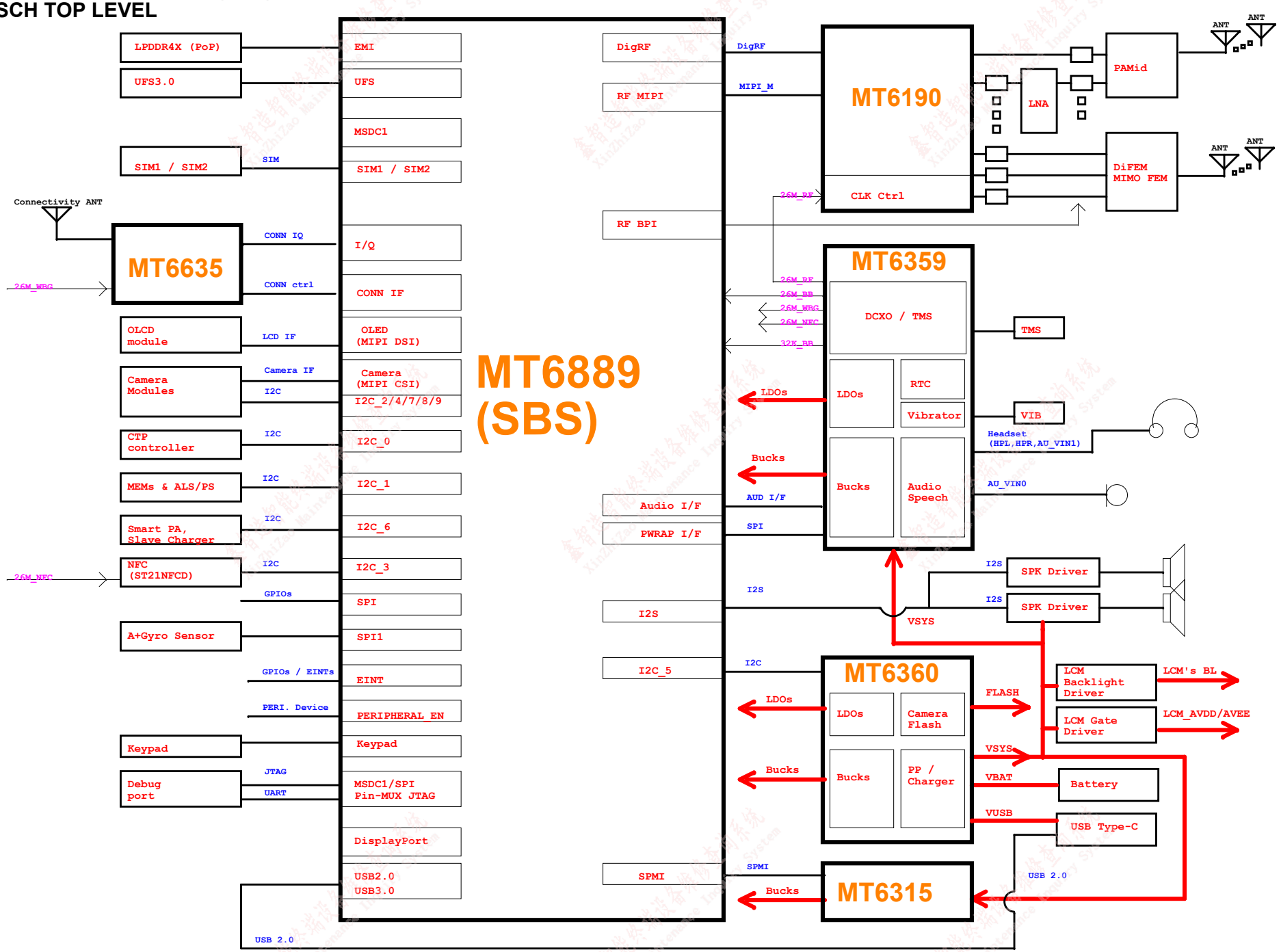

MI PHONE	
Title	MT6873_5GA
Size C	Document Number Diagram
Rev	P0
Date:	Monday, March 22, 2021
Sheet	1 of 73

ANT4 LMHB DRX

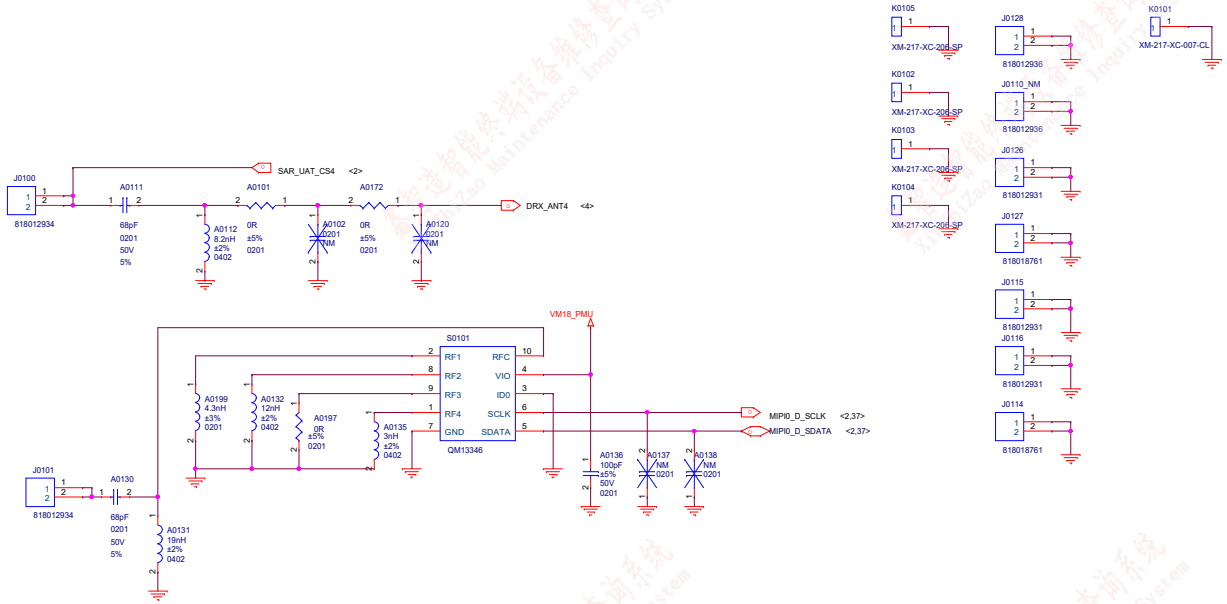

ANT7_WIFI_MIMO

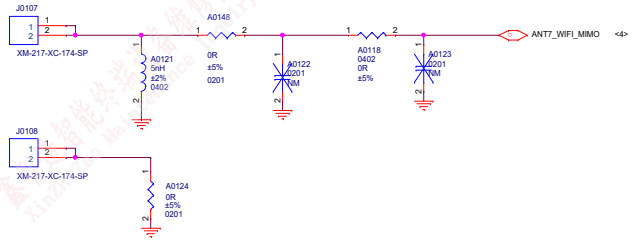

ANT5 N77+N78

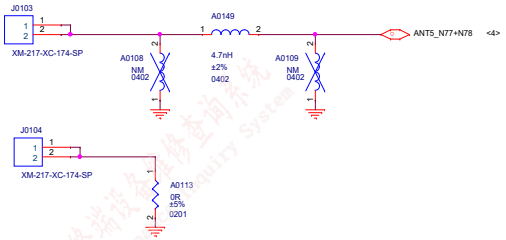

ANT3_MHB+N77+N78

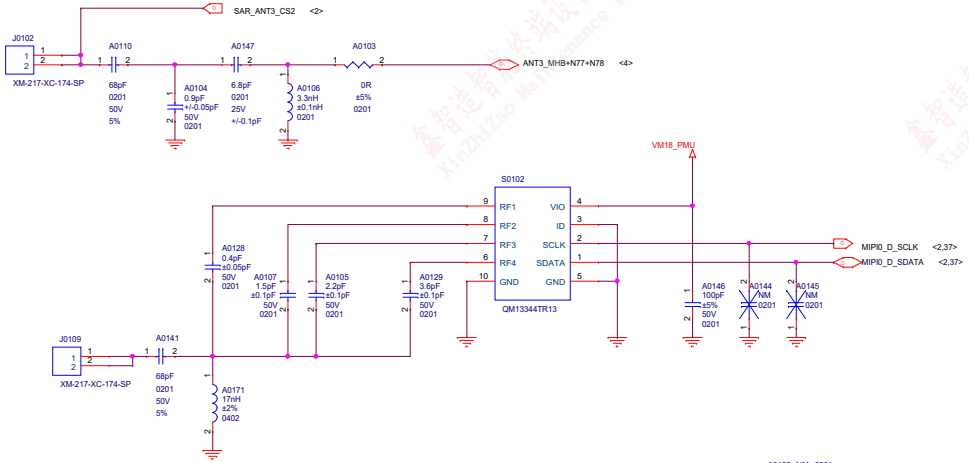

ANT6_Combo（GPSL1+WiFi）

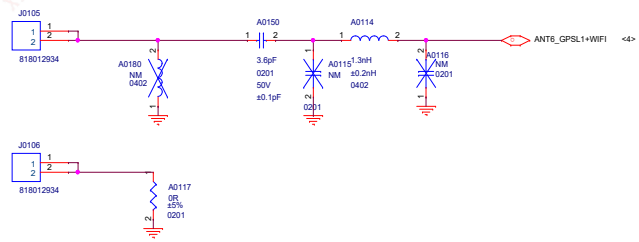

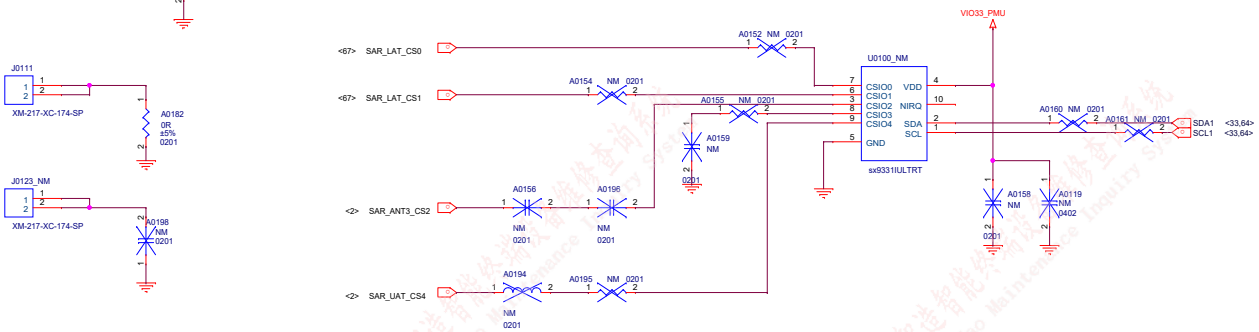

Title	G7A MAIN
Size A2	Document Number <Doc>
Date: Monday, March 22, 2021	Sheet 2 of 72

鑫智造智能终端设备维修查询系统 XinZhiZao Maintenance Inquiry System

鑫智造智能终端设备维修查询系统
XinZhiZao Maintenance Inquiry System

Title	J11 MAIN
Size A3	Document Number <Doc>
Date: Monday, March 22, 2021	Sheet

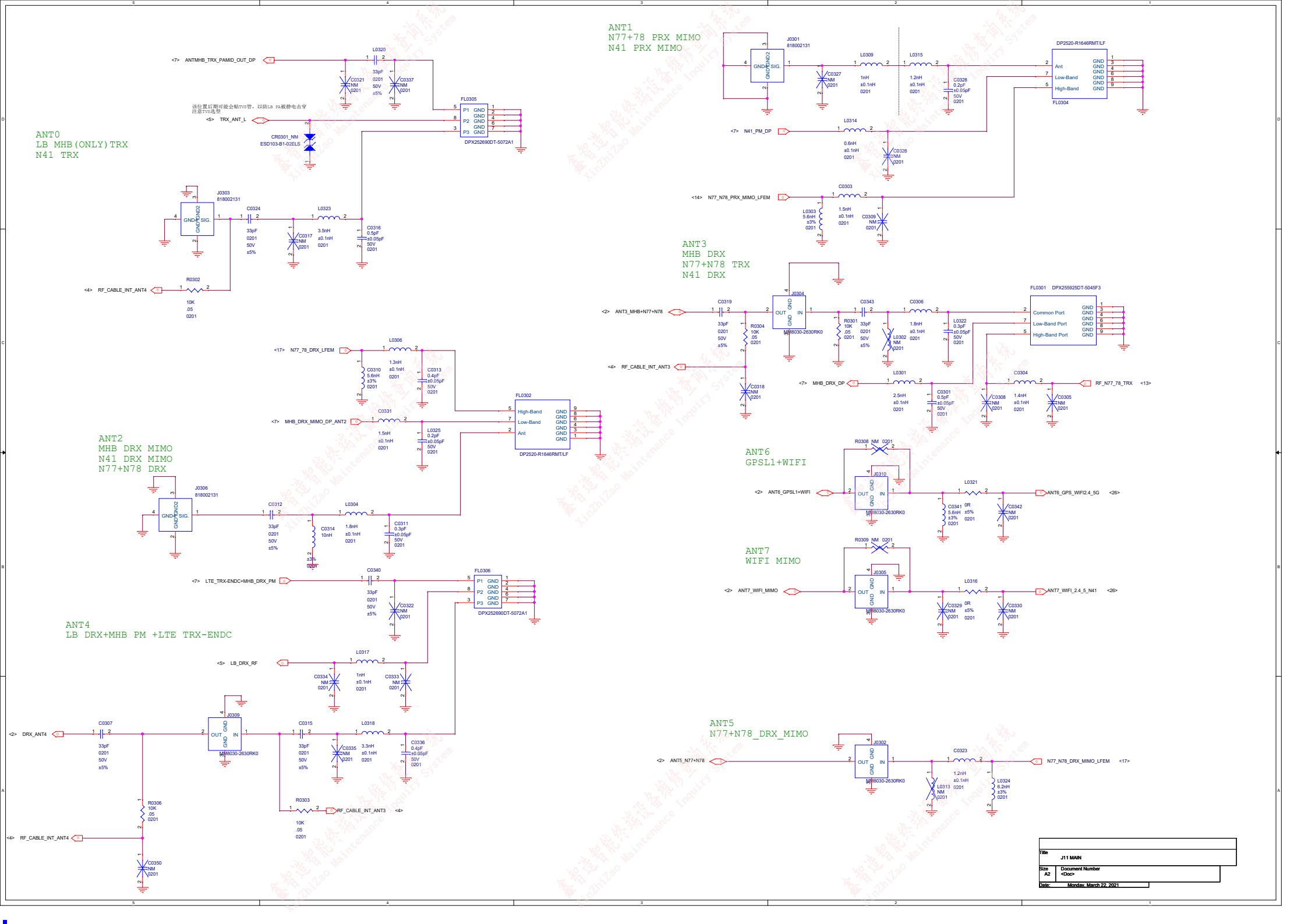
ANT0
LB MHB(ONLY)TRX
N41 TRX
<7> ANTMHB_TRX_PAMID_OUT_DP
L0320
33pF 0201 50V ±5%
C0321 NM 0201
C0337 NM 0201
FL0305
DPX252690DT-5072A1
<5> TRX_ANT_L
CR0301_NM
ESD103-B1-02ELS
J0303
818002131
C0324
33pF 0201 50V ±5%
L0323
3.5nH ±0.1nH 0201
C0317 NM 0201
C0316 0.5pF ±0.05pF 50V 0201
<4> RF_CABLE_INT_ANT4
R0302
10K .05 0201
ANT1
N77+78 PRX MIMO
N41 PRX MIMO
J0301
818002131
L0309
1nH ±0.1nH 0201
C0327 NM 0201
L0315
1.2nH ±0.1nH 0201
C0328 0.2pF ±0.05pF 50V 0201
DP2520-R1646RMT/LF
FL0304
<7> N41_PM_DP
L0314
0.6nH ±0.1nH 0201
C0326 NM 0201
<14> N77_N78_PRX_MIMO_LFEM
C0303
1.5nH ±0.1nH 0201
L0303 5.6nH ±3% 0201
C0309 NM 0201
ANT3
MHB DRX
N77+N78 TRX
N41 DRX
J0304
MM8030-2630RK0
<2> ANT3_MHB+N77+N78
C0319
33pF 0201 50V ±5%
R0304 10K .05 0201
C0343
33pF 0201 50V ±5%
R0301 10K .05 0201
C0306
1.8nH ±0.1nH 0201
L0302 NM 0201
L0322 0.3pF ±0.05pF 50V 0201
FL0301 DPX255925DT-5045F3
Common Port
Low-Band Port
High-Band Port
<4> RF_CABLE_INT_ANT3
C0318 NM 0201
<7> MHB_DRX_DP
L0301
2.5nH ±0.1nH 0201
C0301 0.5pF ±0.05pF 50V 0201
C0304
1.4nH ±0.1nH 0201
C0308 NM 0201
C0305 NM 0201
RF_N77_78_TRX <13>
<17> N77_78_DRX_LFEM
L0306
1.3nH ±0.1nH 0201
C0310 5.6nH ±3% 0201
C0313 0.4pF ±0.05pF 50V 0201
FL0302
DP2520-R1646RMT/LF
High-Band
Low-Band
Ant
<7> MHB_DRX_MIMO_DP_ANT2
C0331
1.5nH ±0.1nH 0201
L0325 0.2pF ±0.05pF 50V 0201
ANT2
MHB DRX MIMO
N41 DRX MIMO
N77+N78 DRX
J0306
818002131
C0312
33pF 0201 50V ±5%
L0304
1.8nH ±0.1nH 0201
C0314 10nH ±3% 0201
C0311 0.3pF ±0.05pF 50V 0201
ANT6
GPSL1+WIFI
R0308 NM 0201
J0310
MM8030-2630RK0
<2> ANT6_GPSL1+WIFI
L0321
C0341 5.6nH ±3% 0201
0R ±5% 0201
C0342 NM 0201
ANT6_GPS_WIFI2.4_5G <26>
<7> LTE_TRX-ENDC+MHB_DRX_PM
C0340
33pF 0201 50V ±5%
C0322 NM 0201
FL0306
DPX252690DT-5072A1
ANT7
WIFI MIMO
R0309 NM 0201
J0305
MM8030-2630RK0
<2> ANT7_WIFI_MIMO
L0316
C0329 NM 0201
0R ±5% 0201
C0330 NM 0201
ANT7_WIFI_2.4_5_N41 <26>
ANT4
LB DRX+MHB PM +LTE TRX-ENDC
<5> LB_DRX_RF
L0317
1nH ±0.1nH 0201
C0334 NM 0201
C0333 NM 0201
<2> DRX_ANT4
C0307
33pF 0201 50V ±5%
J0309
MM8030-2630RK0
C0315
33pF 0201 50V ±5%
L0318
3.3nH ±0.1nH 0201
C0335 NM 0201
C0336 0.4pF ±0.05pF 50V 0201
R0303
10K .05 0201
RF_CABLE_INT_ANT3 <4>
R0306
10K .05 0201
<4> RF_CABLE_INT_ANT4
C0350 NM 0201
ANT5
N77+N78_DRX_MIMO
J0302
MM8030-2630RK0
<2> ANT5_N77+N78
C0323
1.2nH ±0.1nH 0201
L0313 NM 0201
L0324 6.2nH ±3% 0201
N77_N78_DRX_MIMO_LFEM <17>
Title
J11 MAIN
Size A2
Document Number
<Doc>
Date: Monday, March 22, 2021

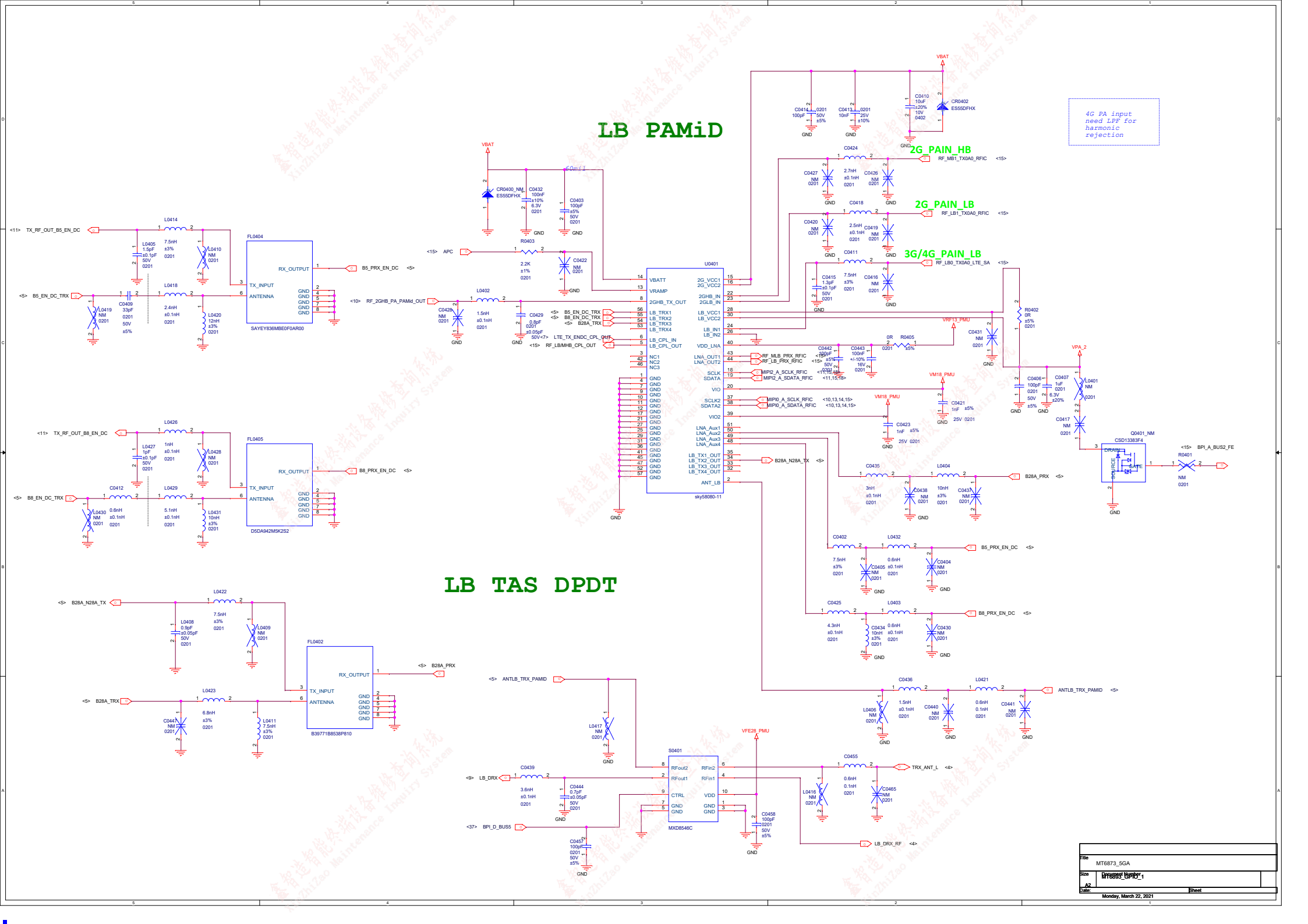
LB PAMiD
LB TAS DPDT
4G PA input need LPF for harmonic rejection
2G_PAIN_HB
2G_PAIN_LB
3G/4G_PAIN_LB
U0401
sky58080-11
FL0404
SAYEY836MBE0F0AR00
FL0405
D5DA942M5K2S2
FL0402
B39771B8538P810
S0401
MXD8546C
Q0401_NM
CSD13383F4
VBAT
VRF13_PMU
VM18_PMU
VPA_2
VFE28_PMU
TX_RF_OUT_B5_EN_DC
B5_EN_DC_TRX
B5_PRX_EN_DC
TX_RF_OUT_B8_EN_DC
B8_EN_DC_TRX
B8_PRX_EN_DC
B28A_N28A_TX
B28A_TRX
B28A_PRX
ANTLB_TRX_PAMID
LB_DRX
BPI_D_BUS5
TRX_ANT_L
LB_DRX_RF
BPI_A_BUS2_FE
APC
RF_2GHB_PA_PAMid_OUT
RF_MB1_TX0A0_RFIC
RF_LB1_TX0A0_RFIC
RF_LB0_TX0A0_LTE_SA
RF_LB/MHB_CPL_OUT
LTE_TX_ENDC_CPL_OUT
MIPI2_A_SCLK_RFIC
MIPI2_A_SDATA_RFIC
MIPI0_A_SCLK_RFIC
MIPI0_A_SDATA_RFIC
RF_MLB_PRX_RFIC
RF_LB_PRX_RFIC
Title
MT6873_5GA
Size
A2
Document Number
MT6873_5GPC_1
Date:
Monday, March 22, 2021
Sheet

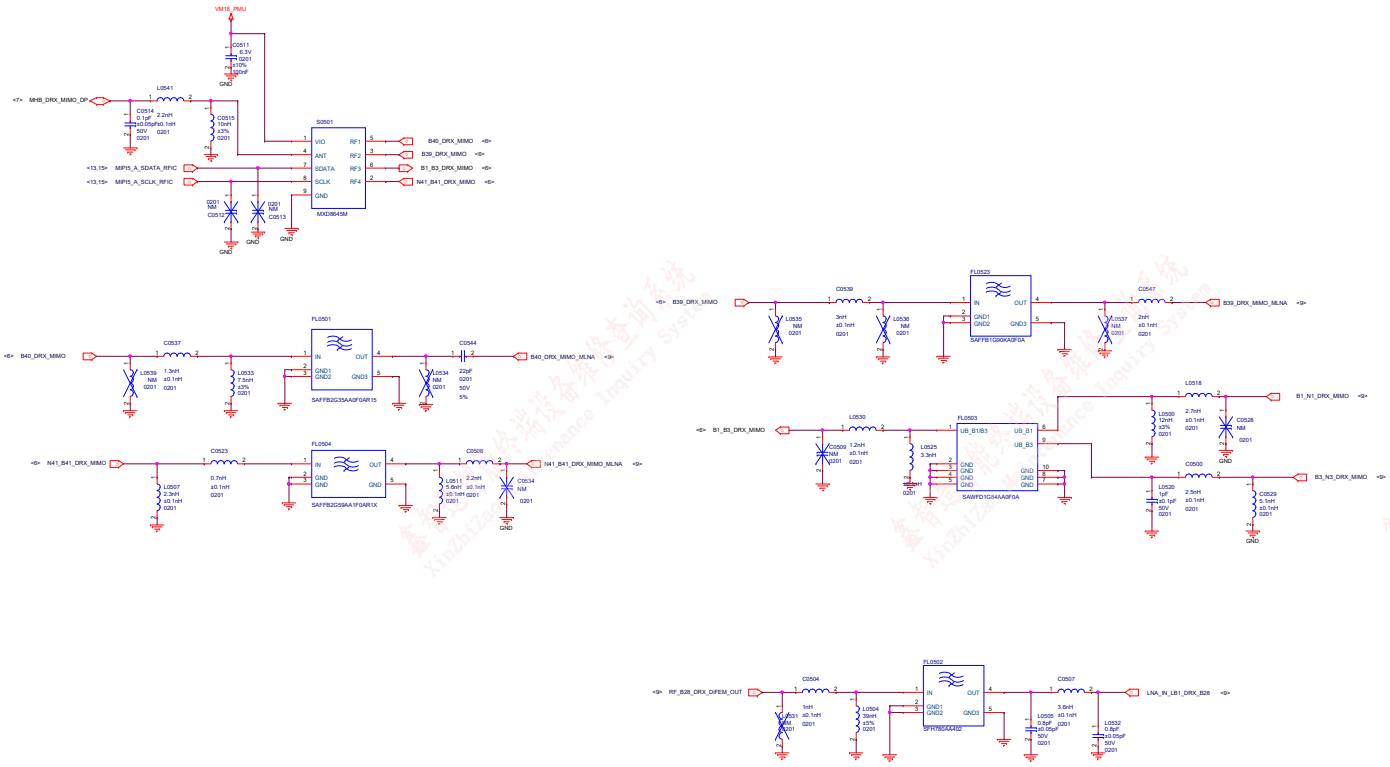

Title:	MI PHONE		
	MT6983_5GL		
Size: A1	Document Number: DRX		Rev: P0
Date: Monday, March 22, 2021		Sheet 6 of 73	

鑫智造智能终端设备维修查询系统 XinZhiZao Maintenance Inquiry System

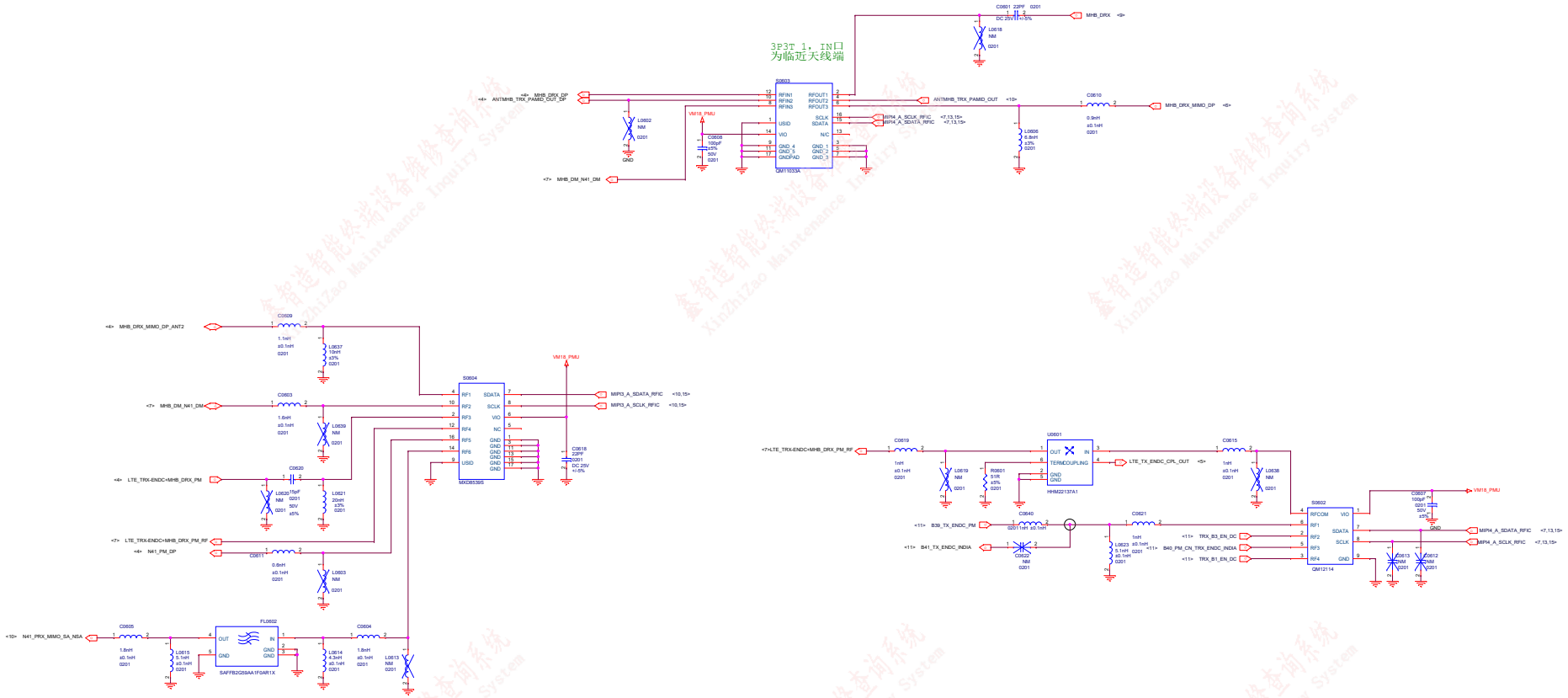

MI PHONE			
File: MT6983_SCL			
Size: A1	Document Number: SWITCH		Rev: P0
Date: Monday, March 22, 2021	Sheet 7 of 73		

鑫智造智能终端设备维修查询系统
XinZhiZao Maintenance Inquiry System

Title	
Size A2	Document Number MT6893_PWR3
Date: Monday, March 22, 2021	Sheet

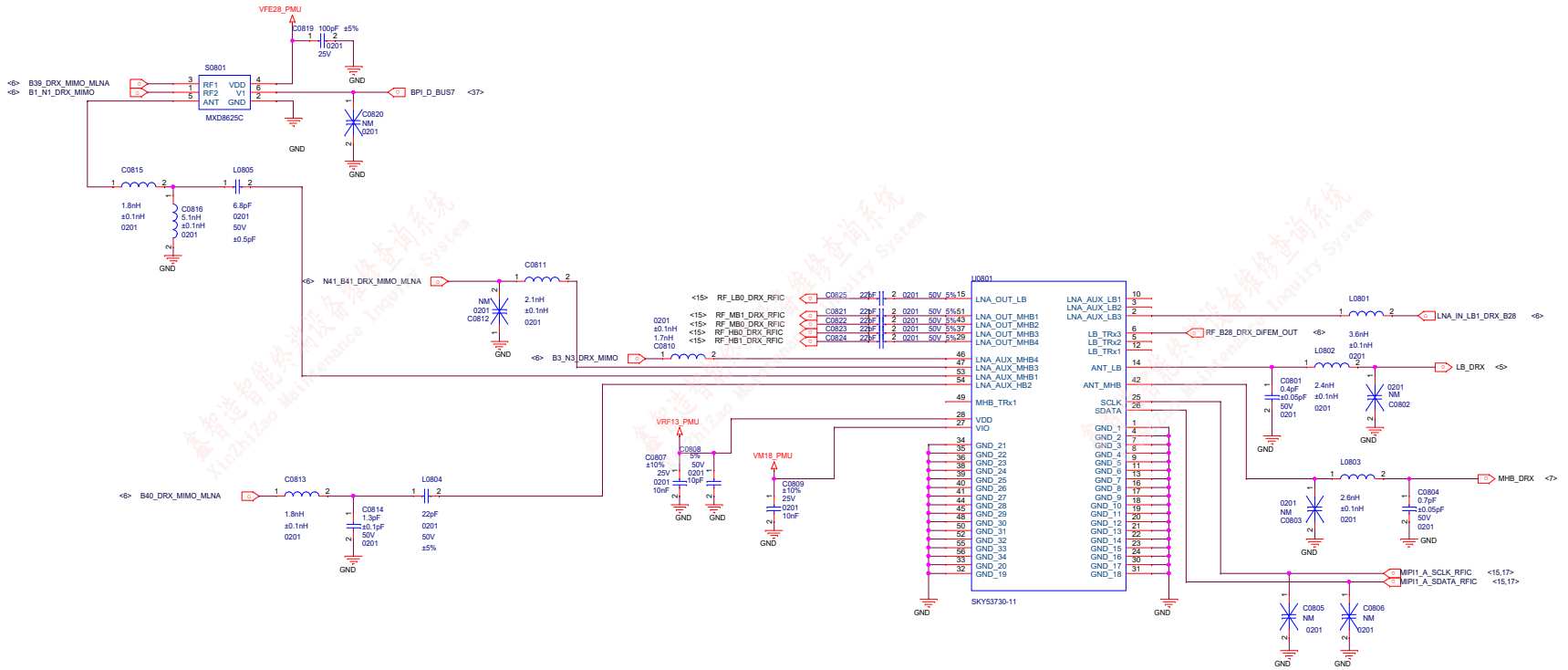

MI PHONE	
Title	MT6883_5GL
Size A2	Document Number DRX_LNA
Rev	P0
Date: Monday, March 22, 2021	Sheet 9 of 73

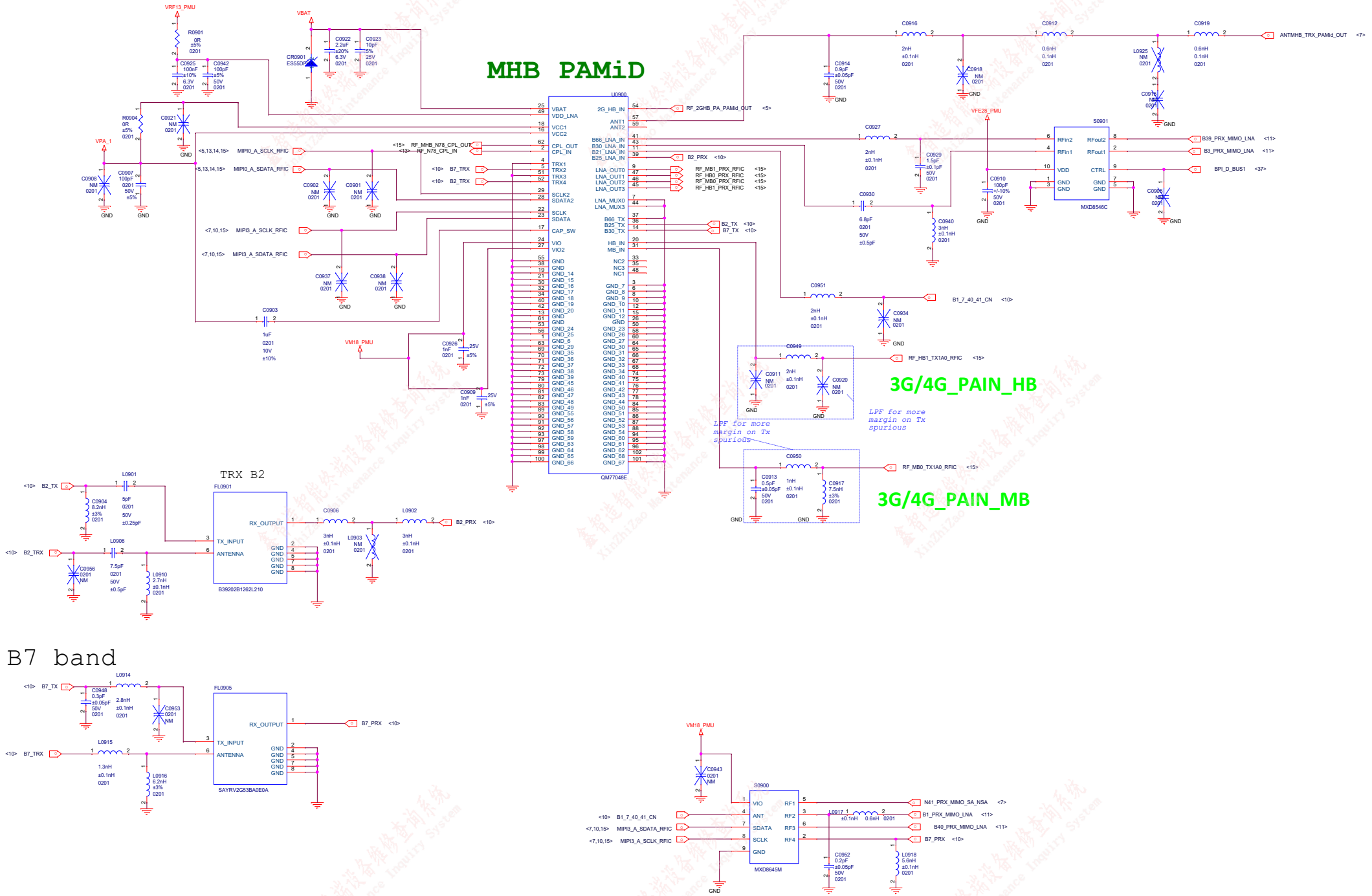

MI PHONE		
Title	MT6883_5GL	
Size A2	Document Number PA_4G	Rev P0
Date: Monday, March 22, 2021	Sheet 10 of 73	

MMMB PA

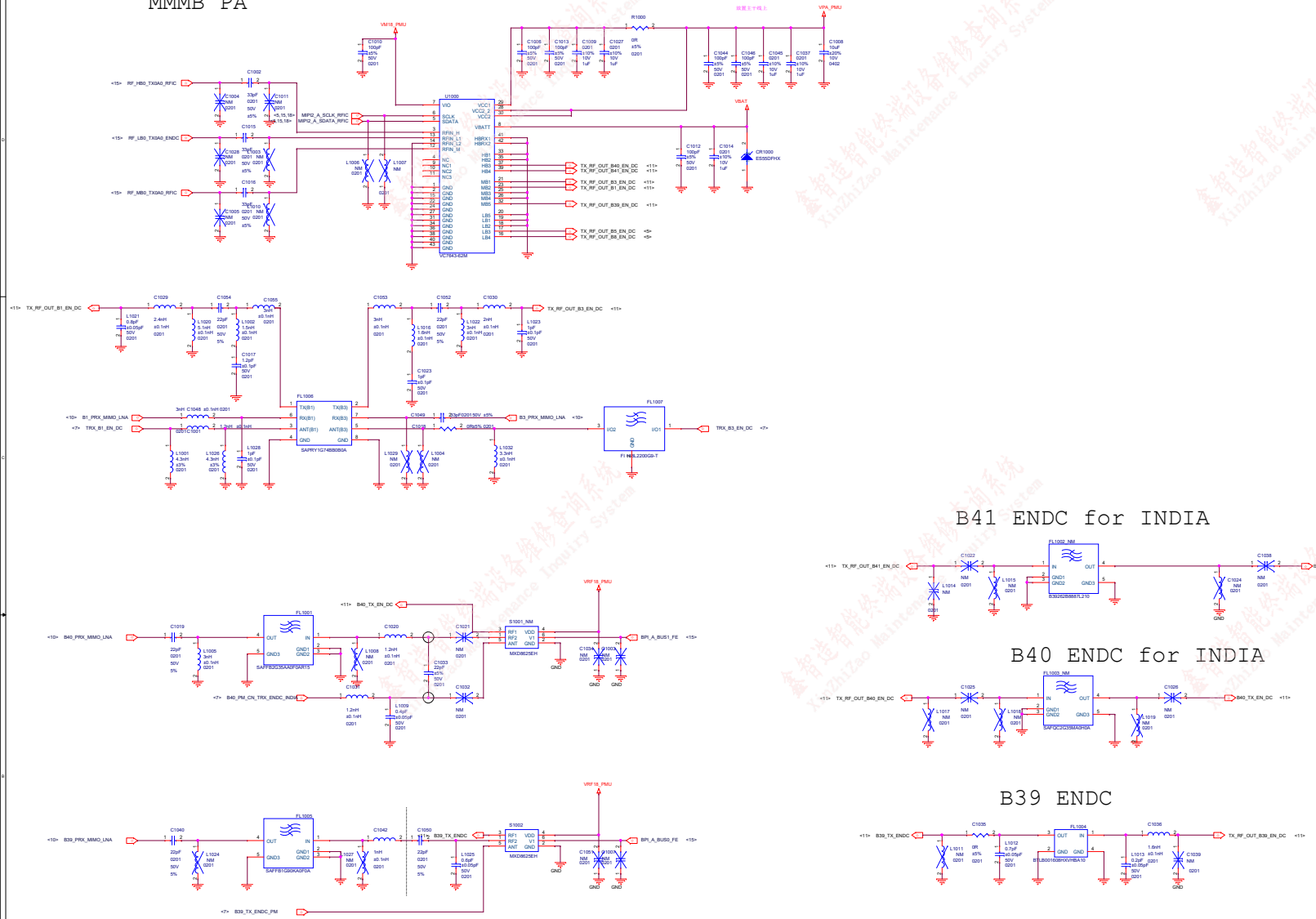

MI PHONE			
File:	MT6983_SCL		
Size: A1	Document Number: PA_SC_N41		Rev: P0
Date: Monday, March 22, 2021	Sheet 11 of 73		

NR N77/N78 PAMID

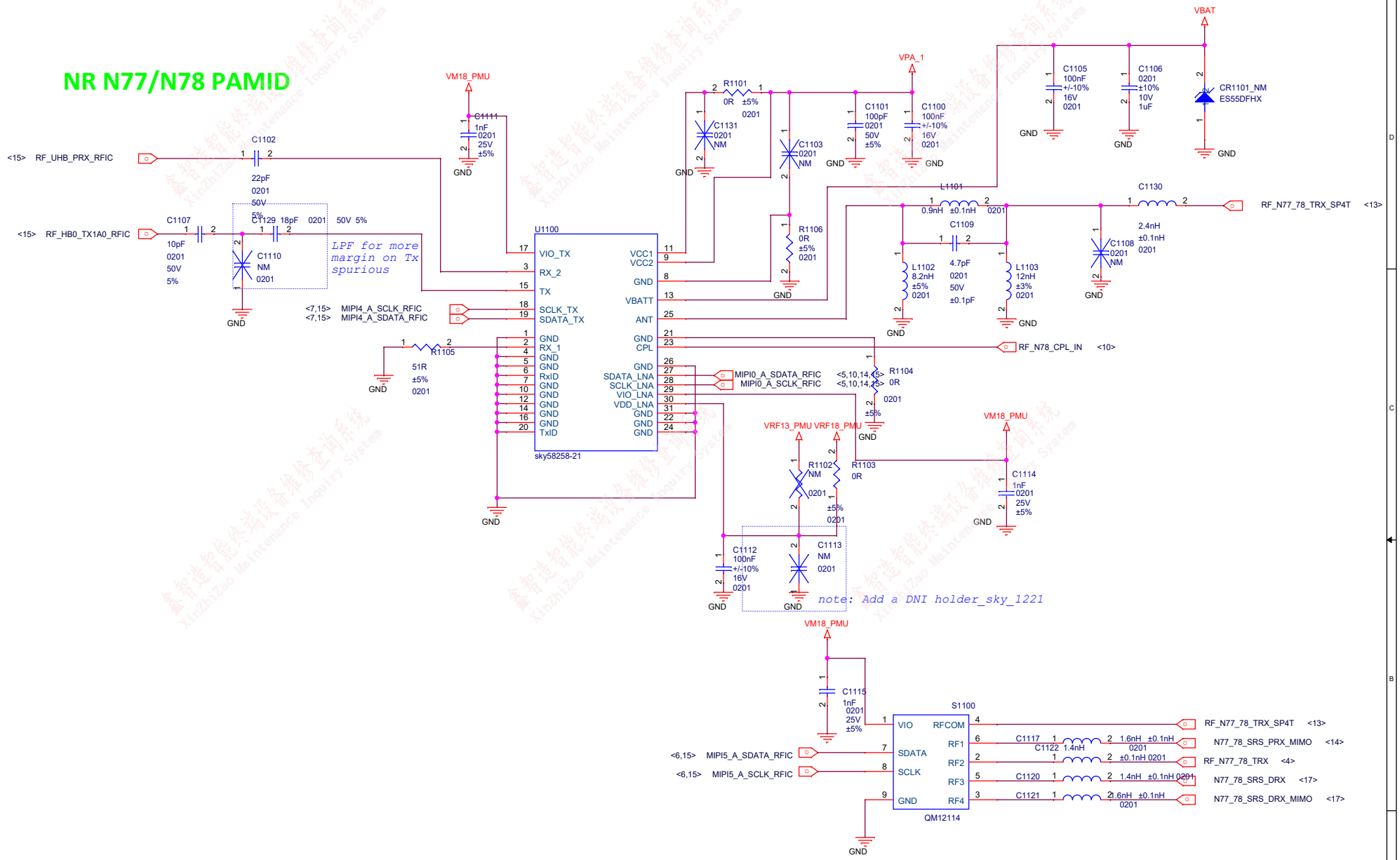

MI PHONE			
Title	MT6883_5GL		
Size A3	Document Number PA_5G_TX0_N78_N79		Rev P0
Date: Monday, March 22, 2021	Sheet 13 of 73		

NR N77/N78 PRx-MIMO LFEM

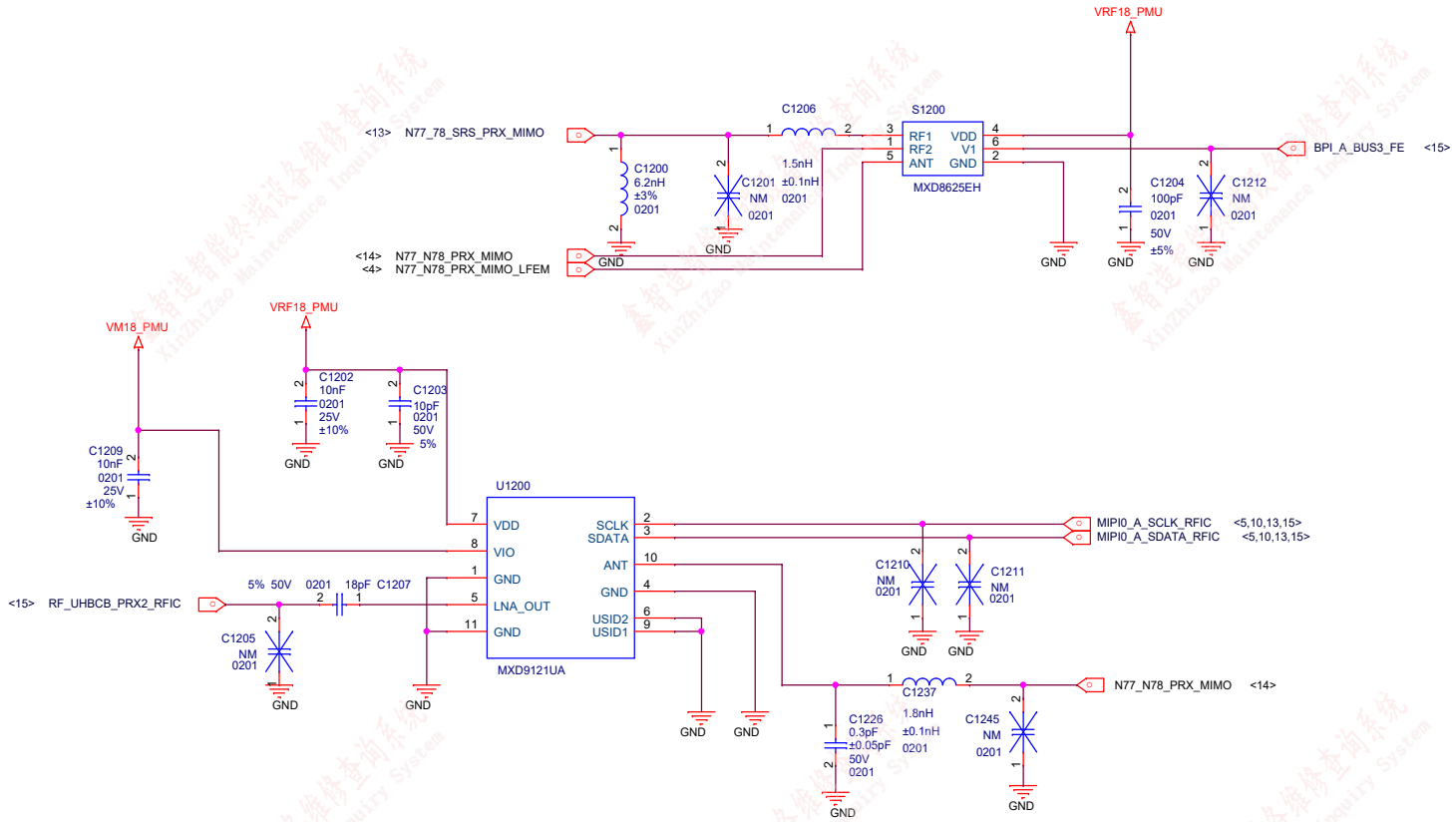

MI PHONE		
Title	MT6883_5GL	
Size A3	Document Number	Rev
Date:	Sheet	of
Monday, March 22, 2021	14	73

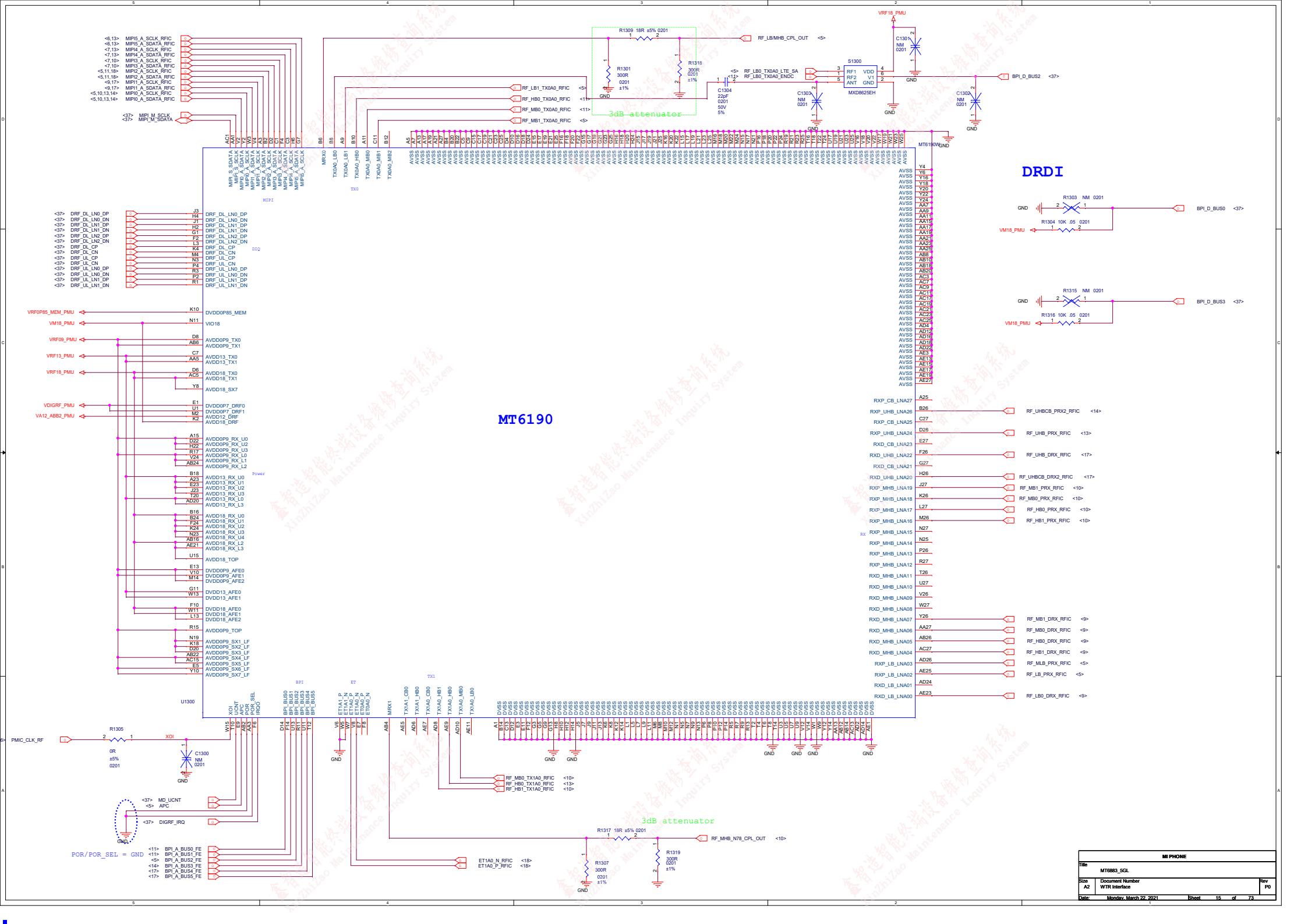

MI PHONE	
Title	MT6883_5GL
Size A2	Document Number WTR Interface
Rev	P0
Date:	Monday, March 22, 2021
Sheet	15 of 73

鑫智造智能终端设备维修查询系统 XinZhiZao Maintenance Inquiry System

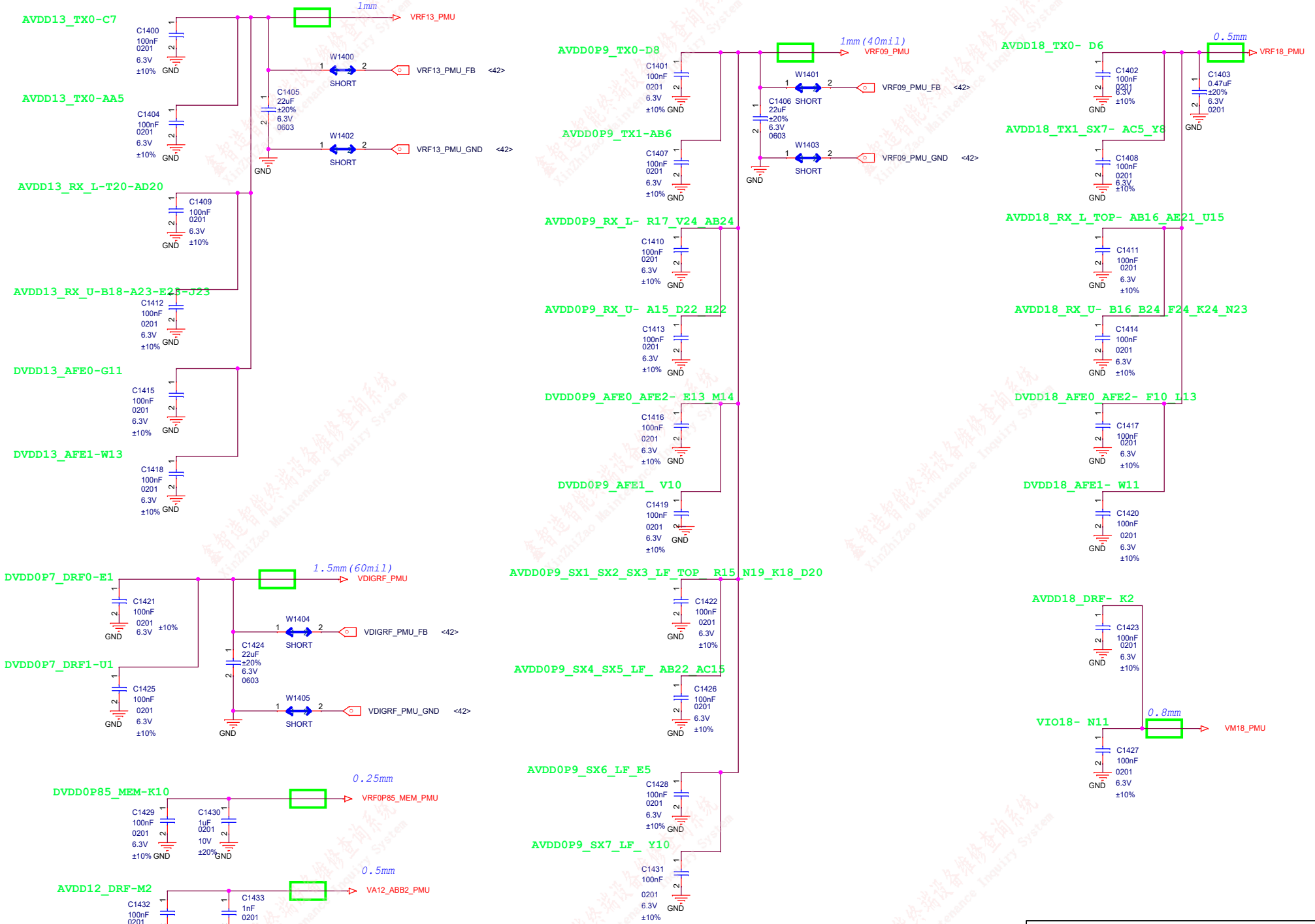

MI PHONE		
Title: MT6883_5GL		
Size: A3	Document Number: WTR PWR	Rev: P0
Date: Monday, March 22, 2021	Sheet 16 of 73	

NR N77/N78/N79 DRx-LFEM

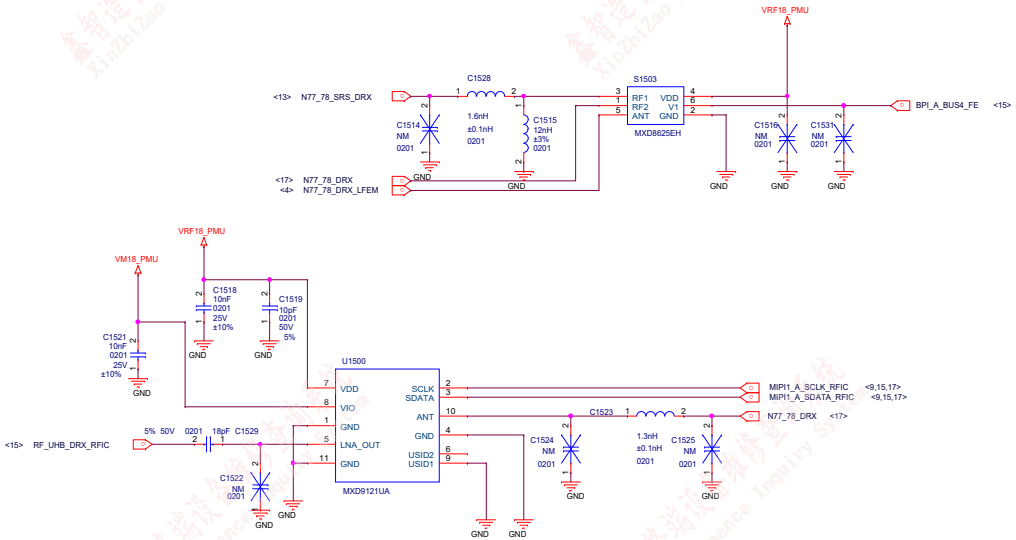

NR N77/N78/N79 DRx_MIMO-LFEM

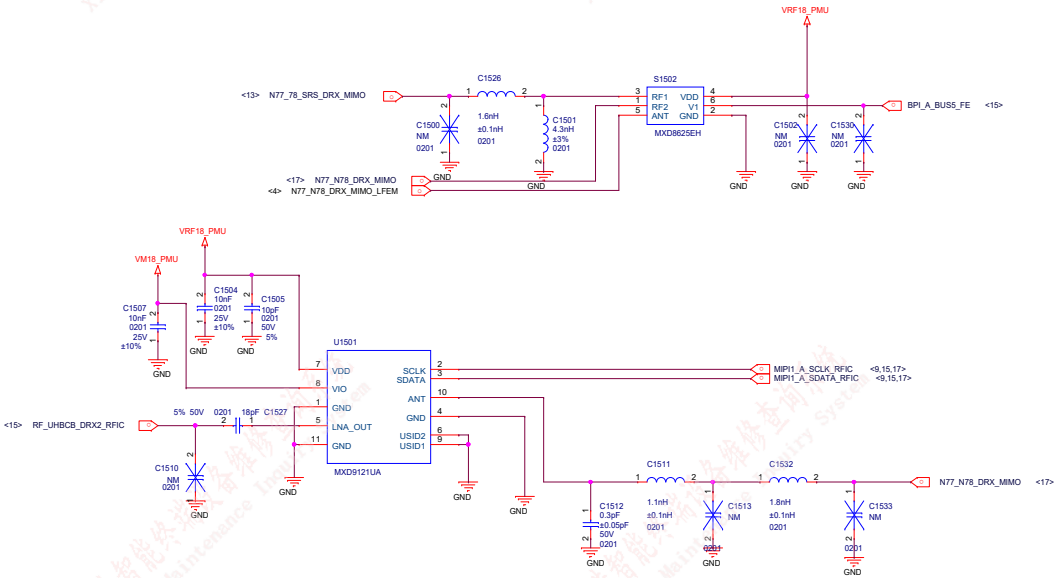

MI PHONE			
Title	MT6883_5GL		
Size A2	Document Number 5G_MIMO_LNA		Rev P0
Date: Monday, March 22, 2021	Sheet 17 of 73		

NR_PAMid_n41_SatPA_ET1_NR1/ET Ref design

L+MH_PAMIid_ET

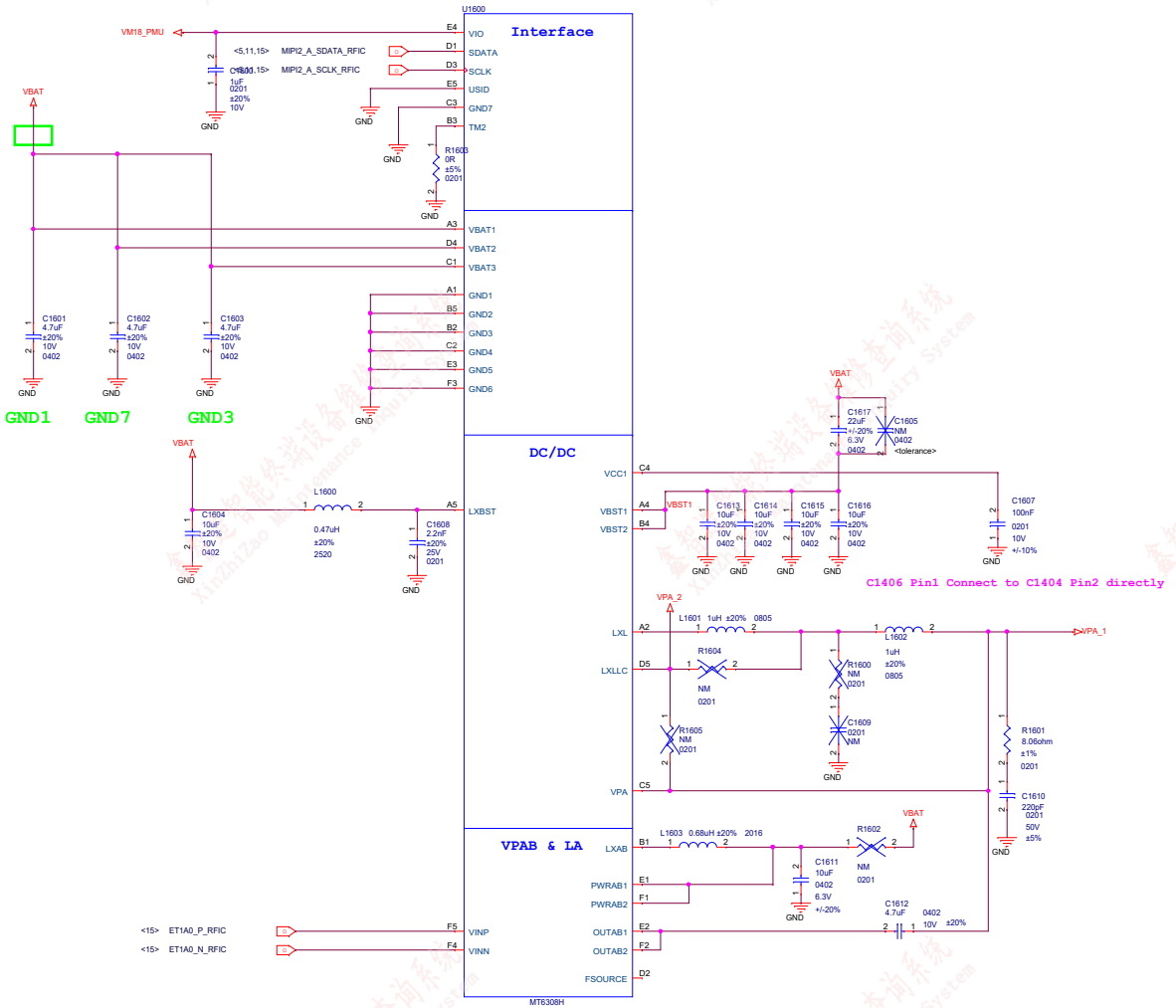

MI PHONE			
Title	MT6883_5GL		
Size A2	Document Number RF_4G_DCDC		Rev P0
Date: Monday, March 22, 2021	Sheet 18 of 73		

鑫智造智能终端设备维修查询系统
XinZhiZao Maintenance Inquiry System

MI PHONE			
Title	MT6883_5GL		
Size A2	Document Number RF_5G_DCDC		Rev P0
Date: Monday, March 22, 2021	Sheet 19 of 73		

鑫智造智能终端设备维修查询系统
XinZhiZao Maintenance Inquiry System

MI PHONE		
Title	MT6873_5GA	
Size A3	Document Number Reserved(for 5G-sub 6G)	Rev P0
Date: Monday, March 22, 2021	Sheet 20 of 73	

鑫智造智能终端设备维修查询系统
XinZhiZao Maintenance Inquiry System

MI PHONE		
Title	MT6873_5GA	
Size A3	Document Number Reserved(for MM Wave)	Rev P0
Date: Monday, March 22, 2021	Sheet 21 of 73	

鑫智造智能终端设备维修查询系统
XinZhiZao Maintenance Inquiry System

MI PHONE		
Title	MT6873_5GA	
Size A3	Document Number Reserved(for 5G-WTR I)	Rev P0
Date: Monday, March 22, 2021	Sheet 22 of 73	

鑫智造智能终端设备维修查询系统
XinZhiZao Maintenance Inquiry System

MI PHONE		
Title	MT6873_5GA	
Size A3	Document Number Reserved(for 5G-WTR P)	Rev P0
Date: Monday, March 22, 2021	Sheet 23 of 73	

鑫智造智能终端设备维修查询系统
XinZhiZao Maintenance Inquiry System

MI PHONE		
Title	MT6873_5GA	
Size A3	Document Number Reserved(for 5G-OTHERS)	Rev P0
Date: Monday, March 22, 2021	Sheet 24 of 73	

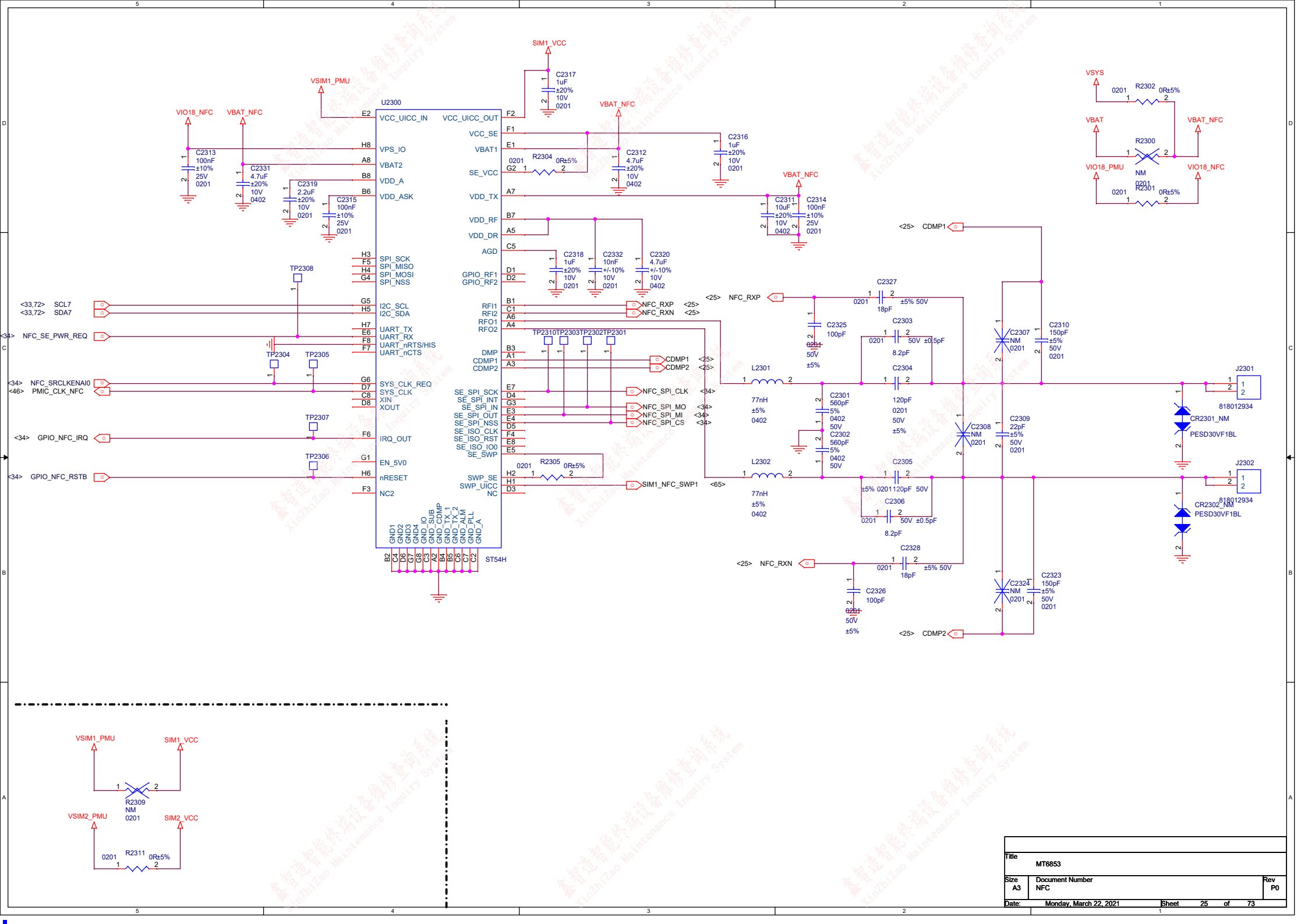

Title	MT6853	
Size A3	Document Number NFC	Rev P0
Date: Monday, March 22, 2021	Sheet 25 of 73	

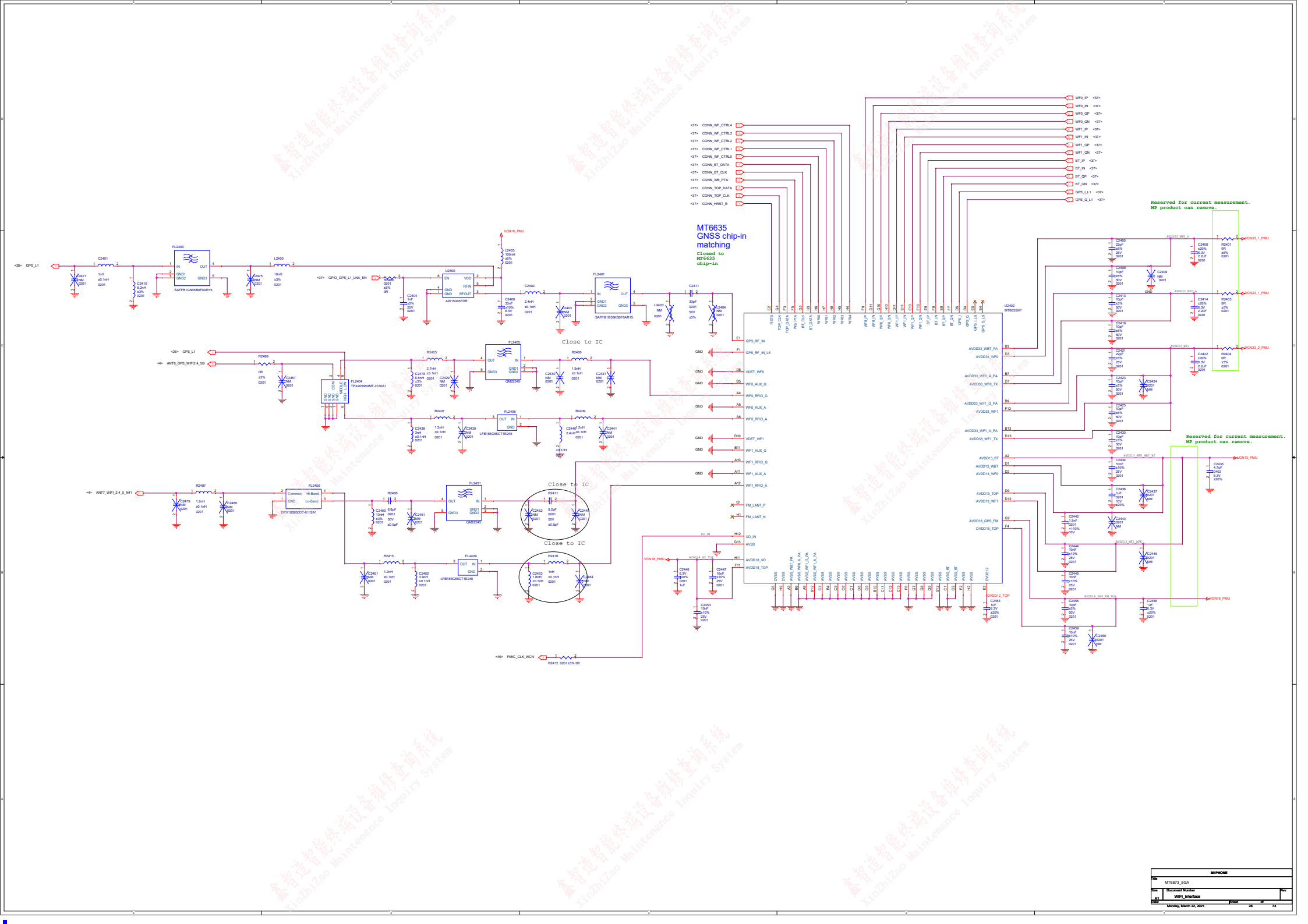

MI PHONE			
File	MT6873_5GA		
Size	Document Number		Rev
A1	WIFI_Interface		
Date: Monday, March 22, 2021	Sheet 26	of 73	

鑫智造智能终端设备维修查询系统
XinZhiZao Maintenance Inquiry System

MI PHONE		
Title: MT6873_5GA		
Size: A3	Document Number: Reserved(for WIFI FEM)	Rev: P0
Date: Monday, March 22, 2021	Sheet 27 of 73	

鑫智造智能终端设备维修查询系统
XinZhiZao Maintenance Inquiry System

MI PHONE			
Title	MT6873_5GA		
Size A3	Document Number Reserved(WIFIdecoupling)		Rev P0
Date: Monday, March 22, 2021	Sheet 28 of 73		

鑫智造智能终端设备维修查询系统
XinZhiZao Maintenance Inquiry System

MI PHONE		
Title	MT6873_5GA	
Size A3	Document Number Reserved(for 11ad/11ax)	Rev P0
Date: Monday, March 22, 2021	Sheet 29 of 73	

鑫智造智能终端设备维修查询系统
XinZhiZao Maintenance Inquiry System

MI PHONE		
Title	MT6873_5GA	
Size A3	Document Number Reserved(for 11ad/11ax)	Rev P0
Date: Monday, March 22, 2021	Sheet 30 of 73	

鑫智造智能终端设备维修查询系统
XinZhiZao Maintenance Inquiry System

MI PHONE		
Title: MT6873_5GA		
Size: A3	Document Number: Reserved(for Digital FM)	Rev: P0
Date: Monday, March 22, 2021	Sheet 31 of 73	

鑫智造智能终端设备维修查询系统
XinZhiZao Maintenance Inquiry System

MI PHONE		
Title	MT6873_5GA	
Size A3	Document Number Reserved(for Analog FM)	Rev P0
Date: Monday, March 22, 2021	Sheet 32 of 73	

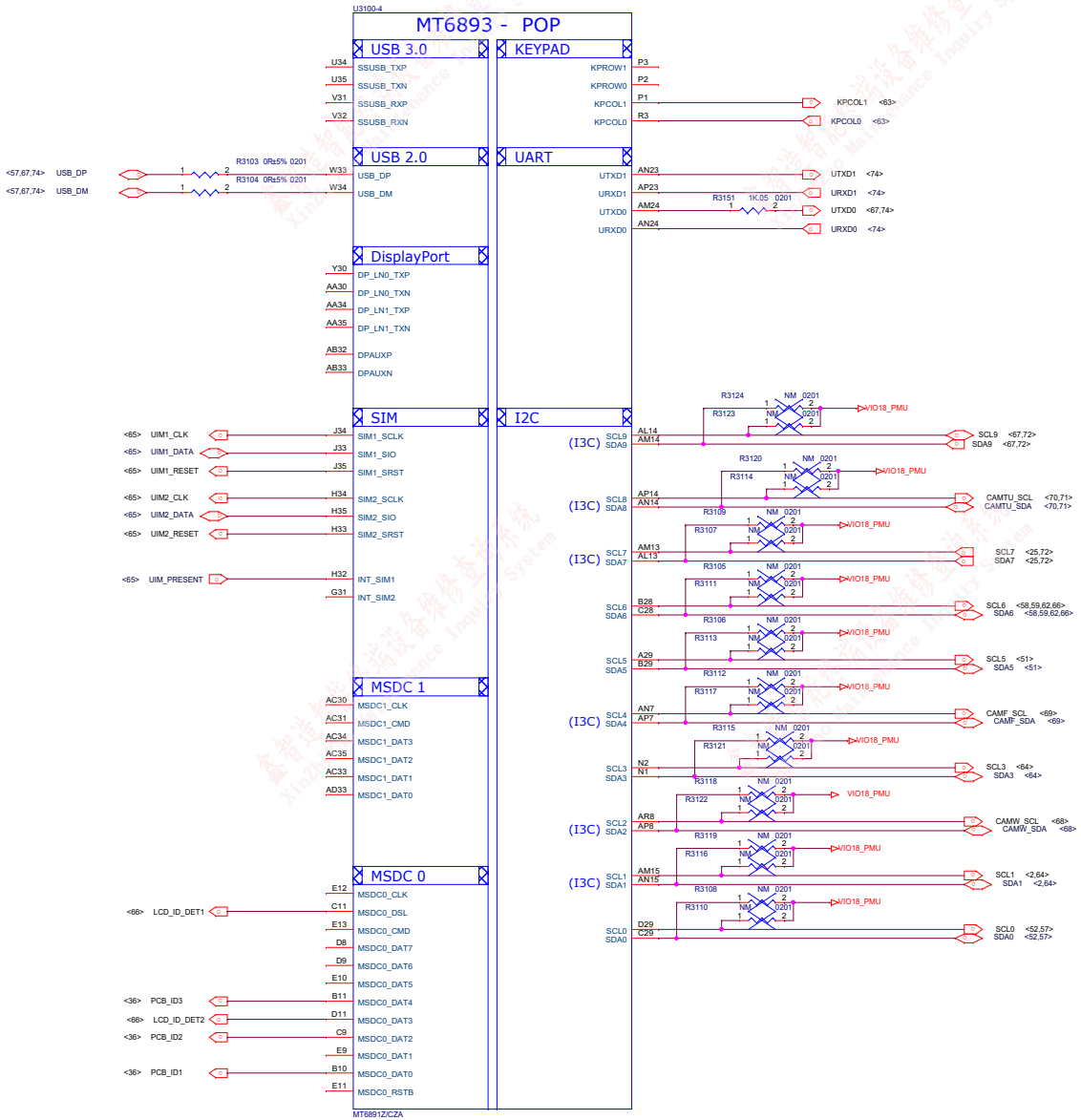

Title	MT6873_5GA
Size	A2
Document Number	MT6893_GPIO_1
Date:	Monday, March 22, 2021
Sheet	33 / 73

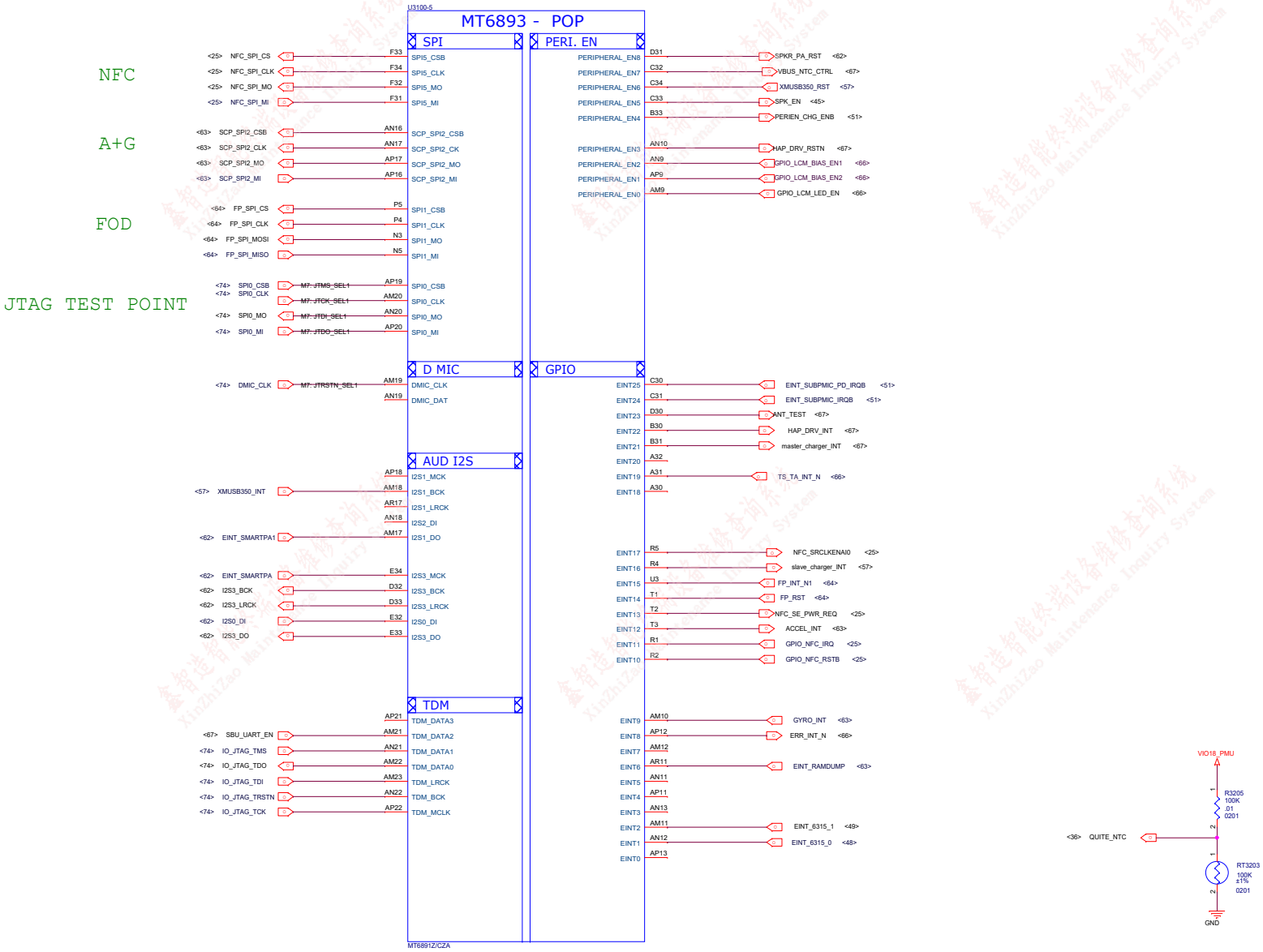

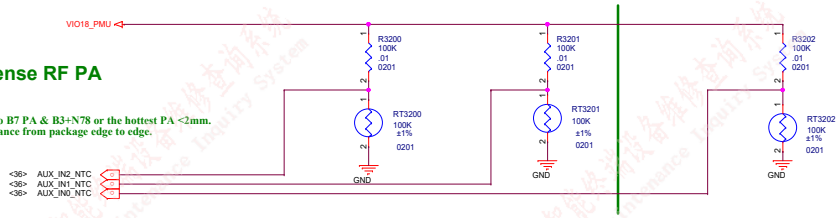

Thermistor to sense RF PA temperature

1. RT3200 & RT3201 must close to B7 PA & B3+N78 or the hottest PA <2mm.
2. The distance is the shortest distance from package edge to edge.

Thermistor to sense AP temperature

1. RT3202 must keep a distance about 6~8 mm away from AP and far from other heat sources 10 mm at least.
2. The distance is the shortest distance from package edge to edge.

Title	MT6873_5GA
Size	A2
Document Number	MT6893_GPIO_2
Date:	Monday, March 22, 2021
Sheet	

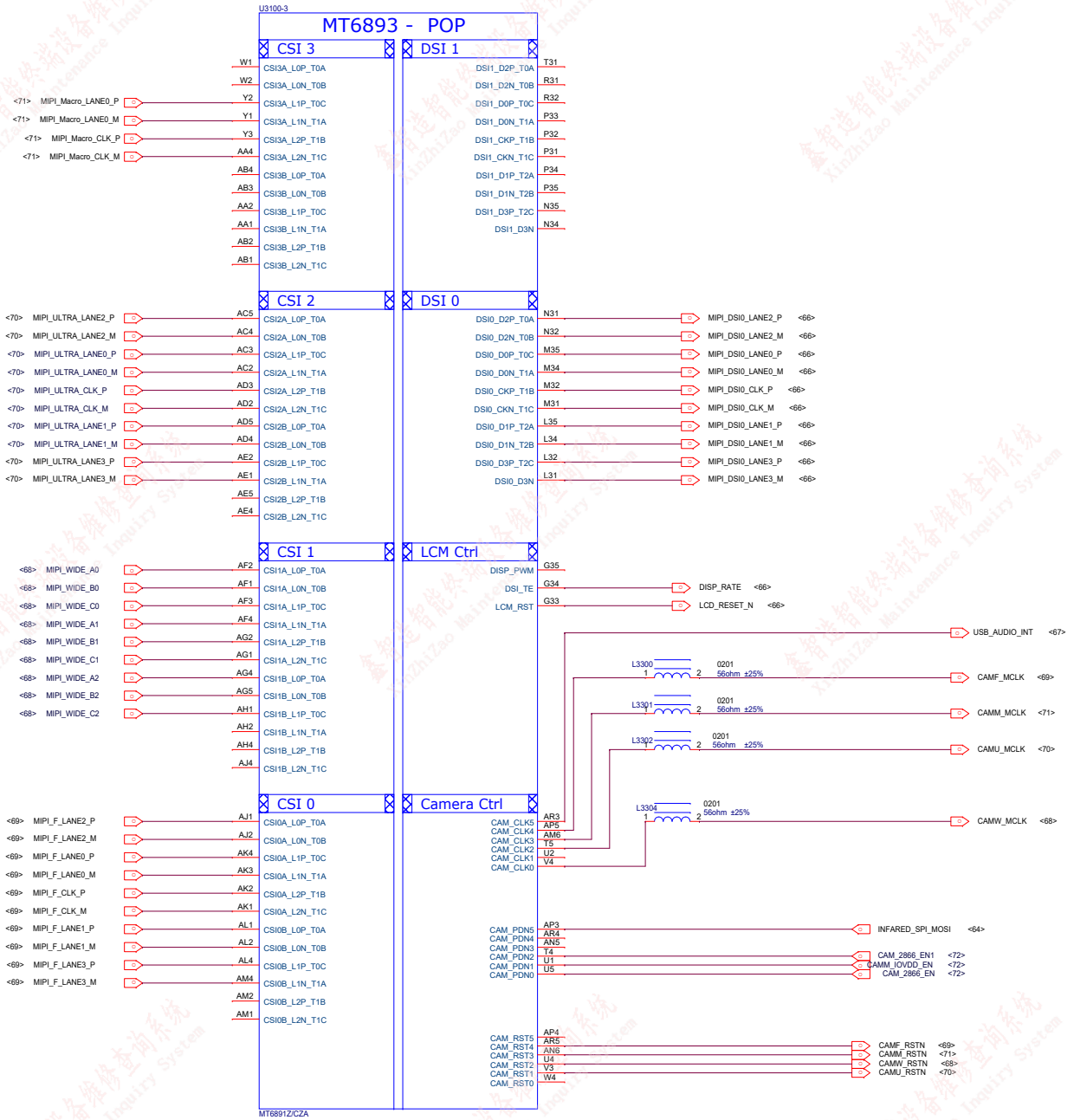

2M depth, 2M Marco one csi phy

MI PHONE			
Title	MT6873_5GA		
Size C	Document Number MT6883_CAM_LCM		Rev
Date: Monday, March 22, 2021	Sheet 35	of 73	

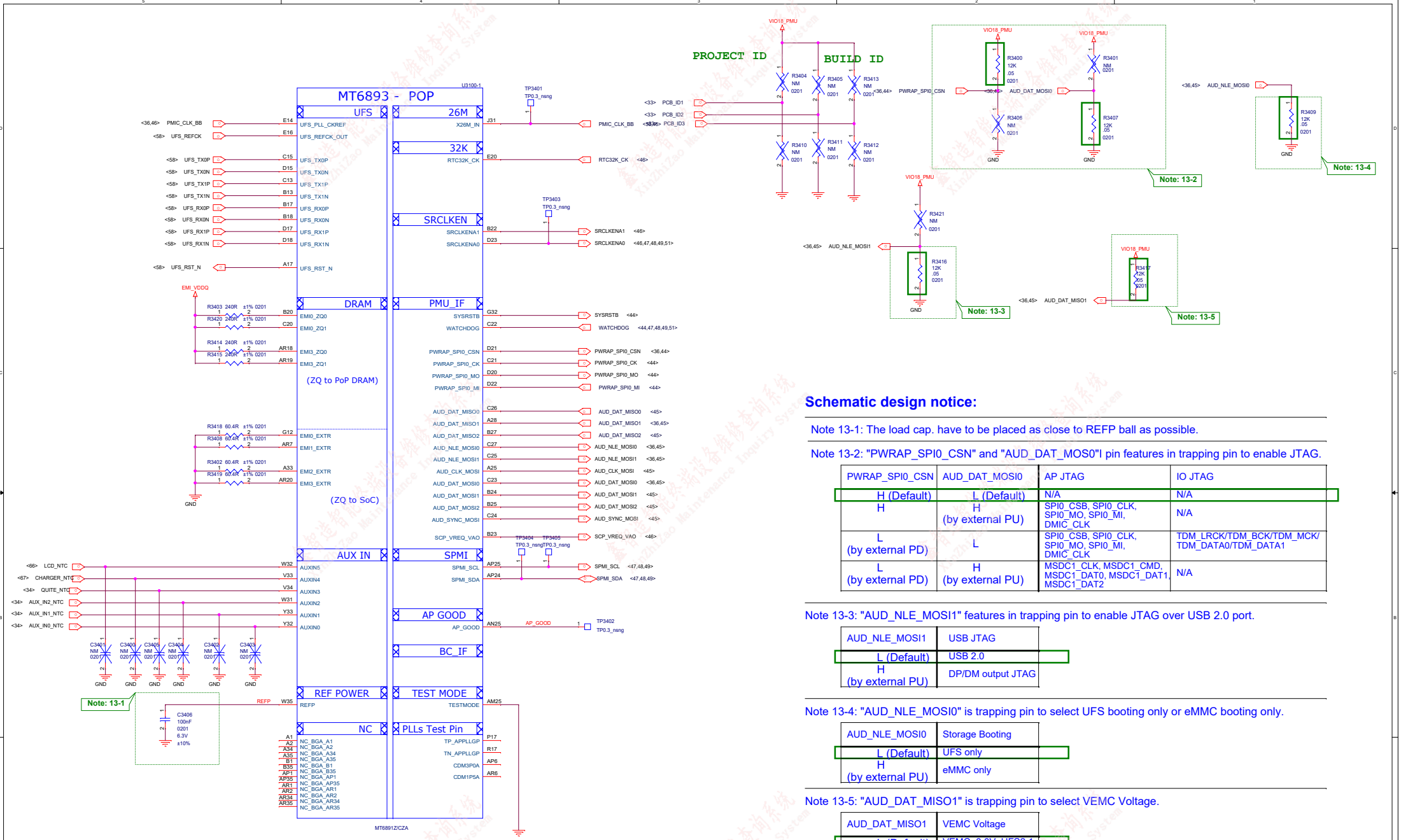

Schematic design notice:

Note 13-1: The load cap. have to be placed as close to REFP ball as possible.

Note 13-2: "PWRAP_SPI0_CSN" and "AUD_DAT_MOS0"I pin features in trapping pin to enable JTAG.

PWRAP_SPI0_CSN	AUD_DAT_MOSI0	AP JTAG	IO JTAG
H (Default)	L (Default)	N/A	N/A
H	H (by external PU)	SPI0_CSB, SPI0_CLK, SPI0_MO, SPI0_MI, DMIC_CLK	N/A
L (by external PD)	L	SPI0_CSB, SPI0_CLK, SPI0_MO, SPI0_MI, DMIC_CLK	TDM_LRCK/TDM_BCK/TDM_MCK/ TDM_DATA0/TDM_DATA1
L (by external PD)	H (by external PU)	MSDC1_CLK, MSDC1_CMD, MSDC1_DAT0, MSDC1_DAT1, MSDC1_DAT2	N/A

Note 13-3: "AUD_NLE_MOSI1" features in trapping pin to enable JTAG over USB 2.0 port.

AUD_NLE_MOSI1	USB JTAG
L (Default)	USB 2.0
H (by external PU)	DP/DM output JTAG

Note 13-4: "AUD_NLE_MOSI0" is trapping pin to select UFS booting only or eMMC booting only.

AUD_NLE_MOSI0	Storage Booting
L (Default)	UFS only
H (by external PU)	eMMC only

Note 13-5: "AUD_DAT_MISO1" is trapping pin to select VEMC Voltage.

AUD_DAT_MISO1	VEMC Voltage
L (Default)	VEMC=3.0V UFS2.1
H (by external PU)	VEMC=2.5V UFS3.0

Title	MT6873_5GA
Size	A2
Document Number	MT6893_INTF
Date:	Monday, March 22, 2021

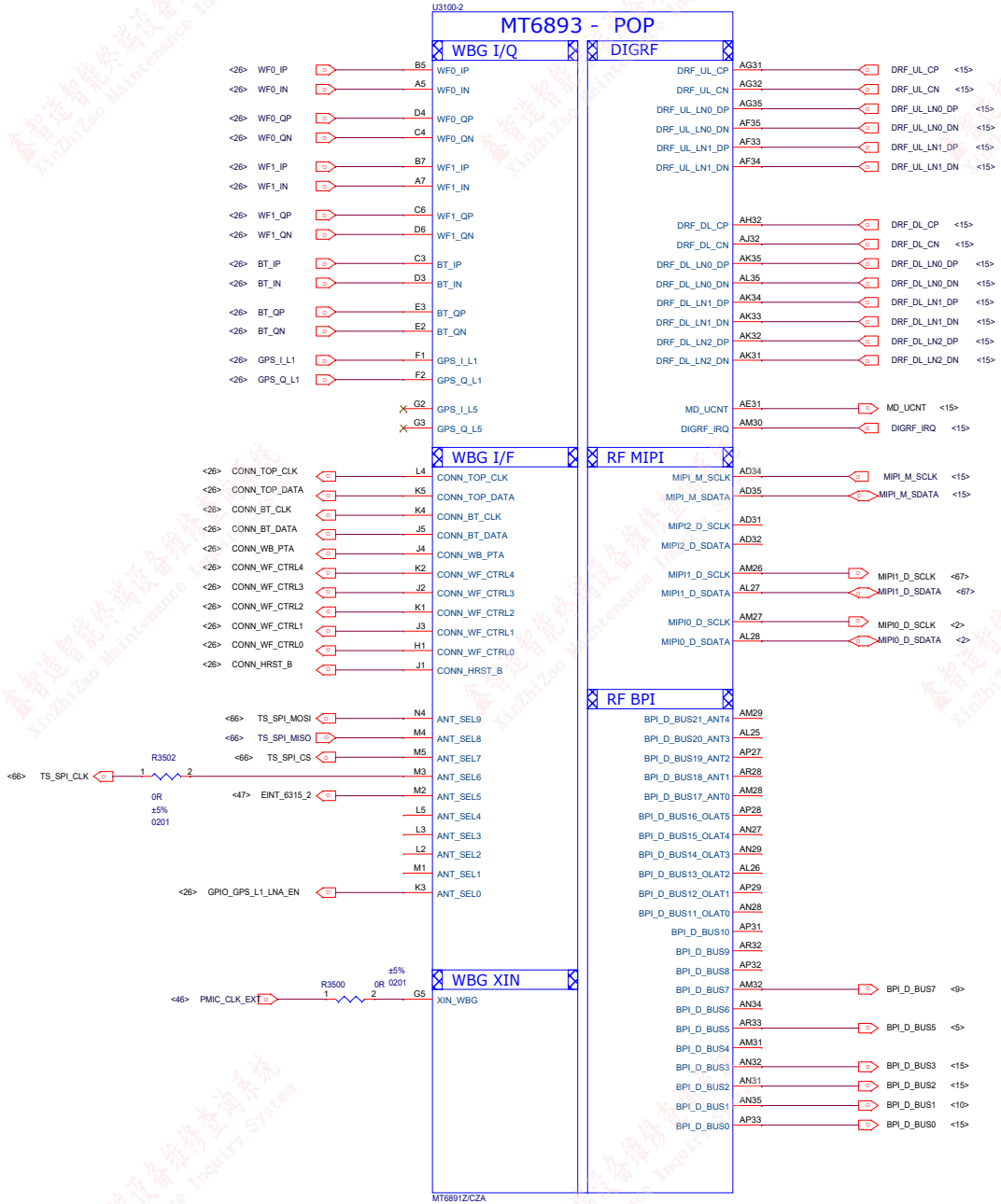

Title	MT6873_5GA
Size	C
Document Number	MT6893_RF_INTF
Date:	Monday, March 22, 2021

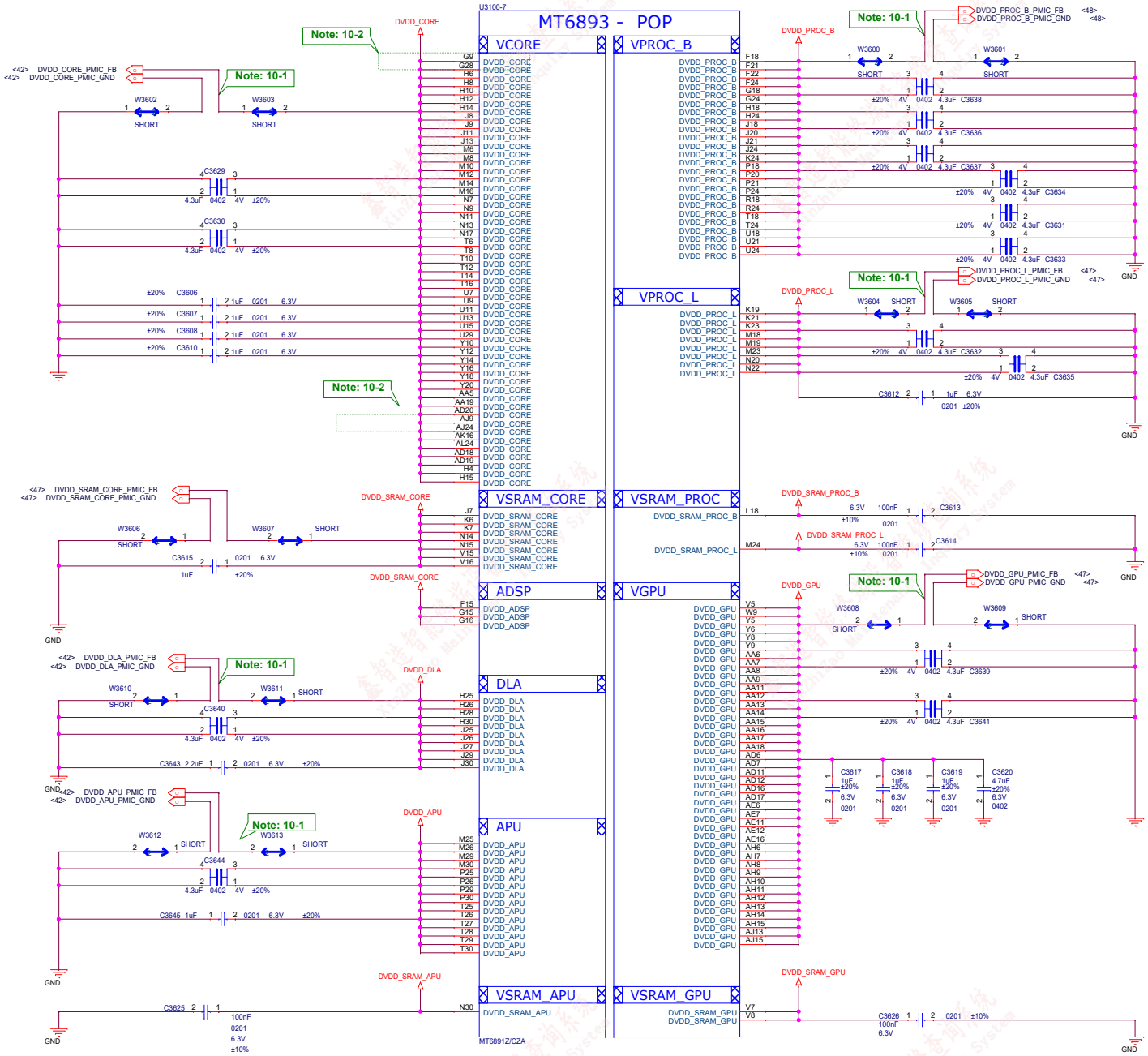

Schematic design notice of "10_BB_POWER_PDN" page.

Note 10-1: Differential pair of PMIC remote sense must be close to BB's ball.

Remote sense trace with GND shielding to PMIC (Differential)

Note 10-2: DVDD_CORE PDN cap must be under BB's ball G28/AJ24/AJ9/G9

The purpose of this symbol is used for including POP LPDDR4X in BOM.

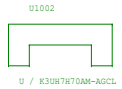

4.3UF三端子电容可酌情替换为4.7UF和1UF的两端子电容

Title	MT6873_5GA
Size C	Document Number MT6893_PWR1
Date:	Monday, March 22, 2021

鑫智造智能终端设备维修查询系统 XinZhiZao Maintenance Inquiry System

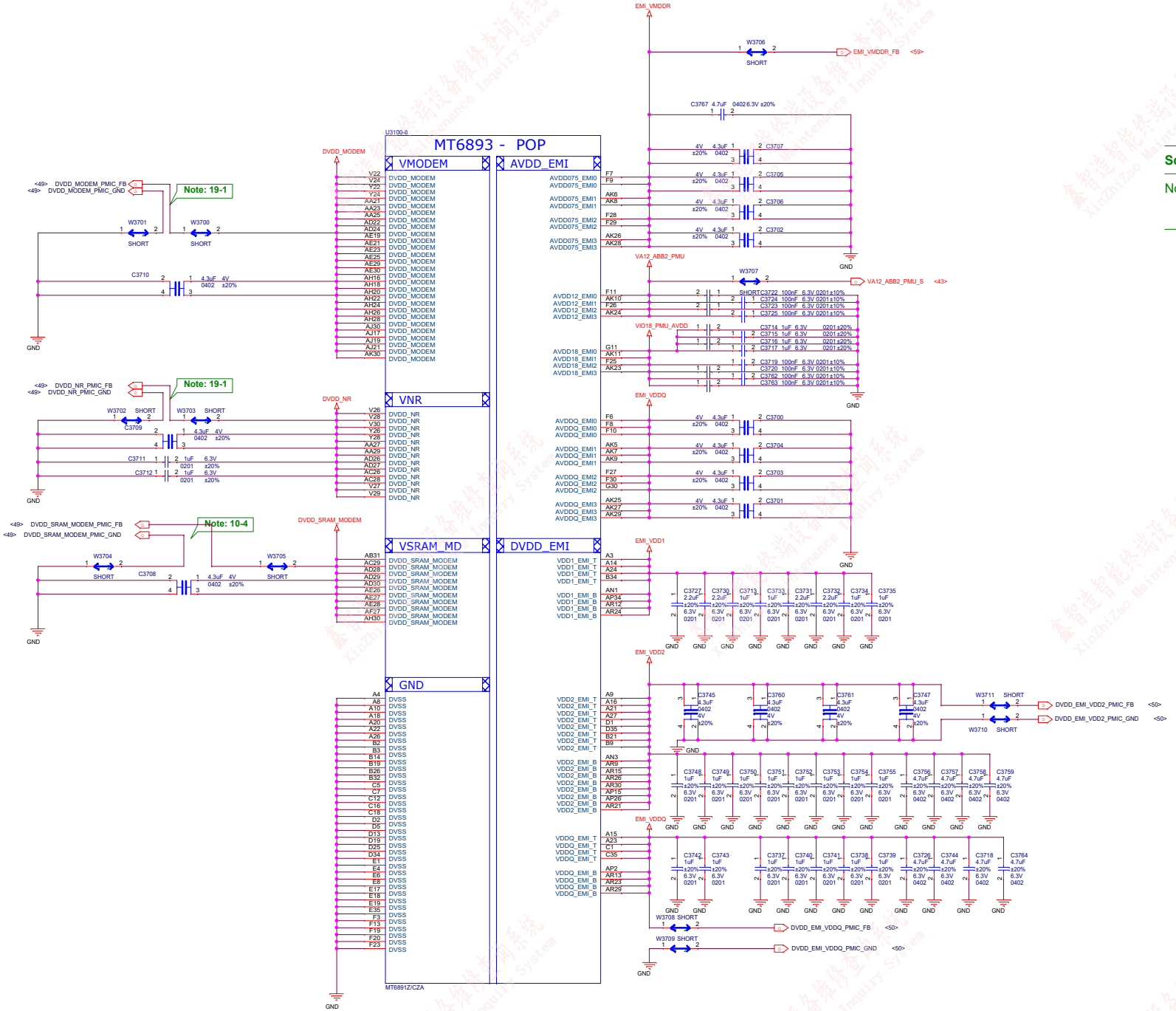

Schematic design notice of "11_BB_POWER_PDN" page.

Note 11-1: Differential pair of PMIC remote sense must be close to BB's ball.
Remote sense trace with GND shielding to PMIC (Differential)

4.3UF三端子电容可酌情替换为4.7UF和1UF的两端子电容

Title	
Size	Document Number
Date:	

鑫智造智能终端设备维修查询系统 XinZhiZao Maintenance Inquiry System

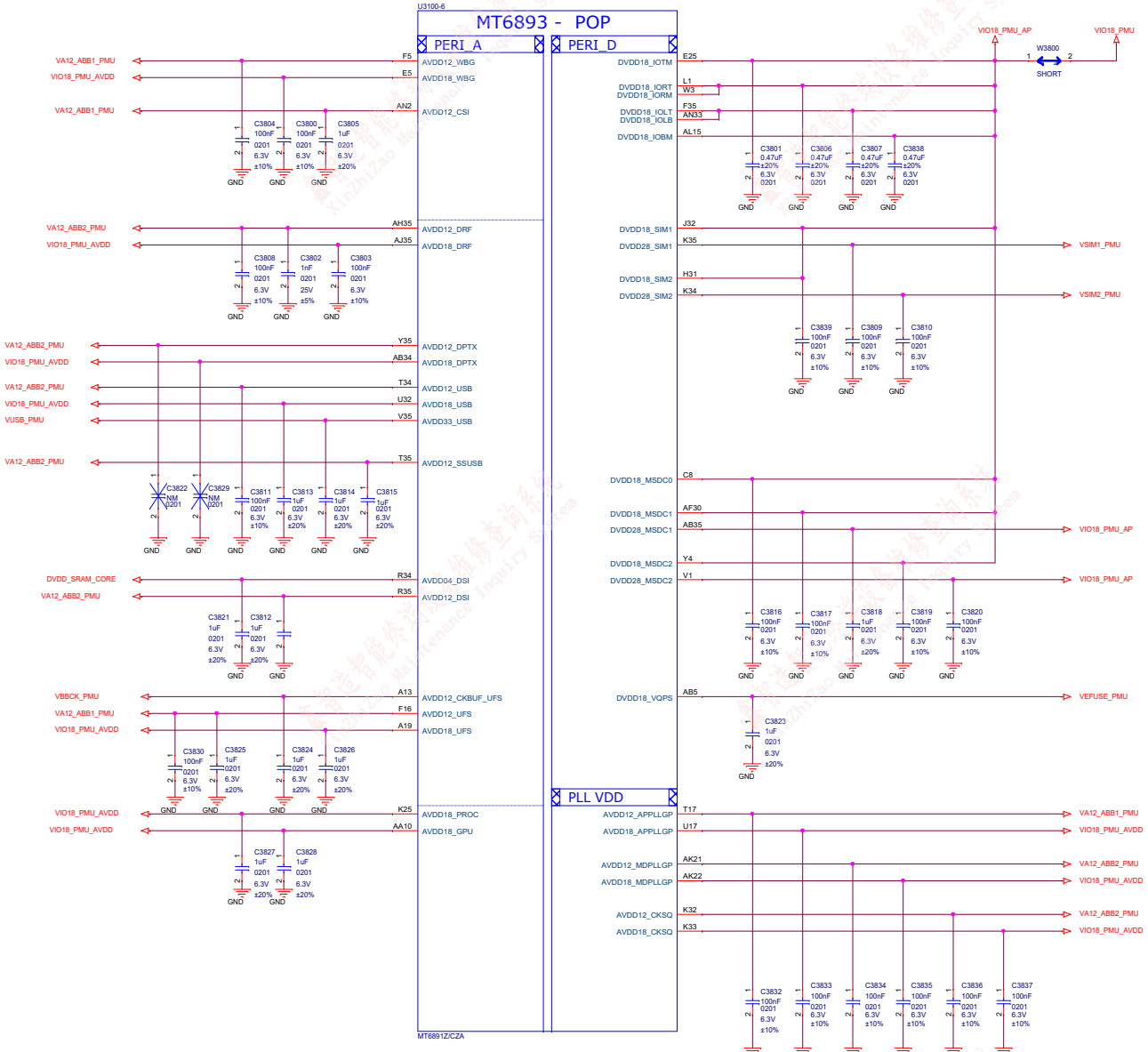

Title	
Size A2	Document Number
Date:	

鑫智造智能终端设备维修查询系统 XinZhiZao Maintenance Inquiry System

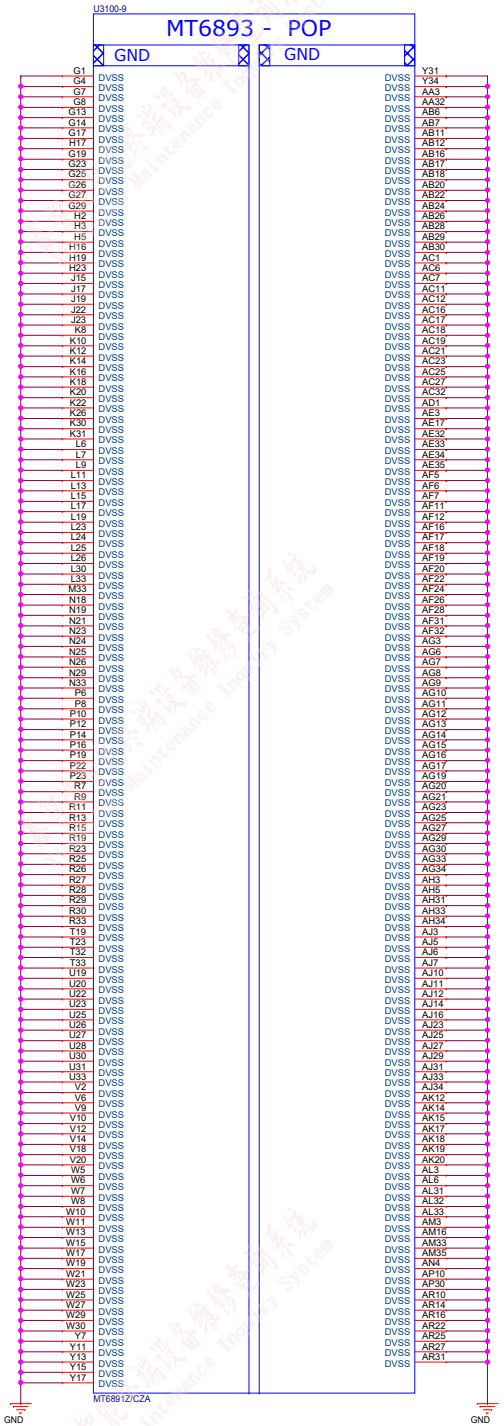

Title	MT6873_5GA
Size: C	Document Number: MT6893_GND
Date:	Monday, March 22, 2021

ALL C out Close to SOC

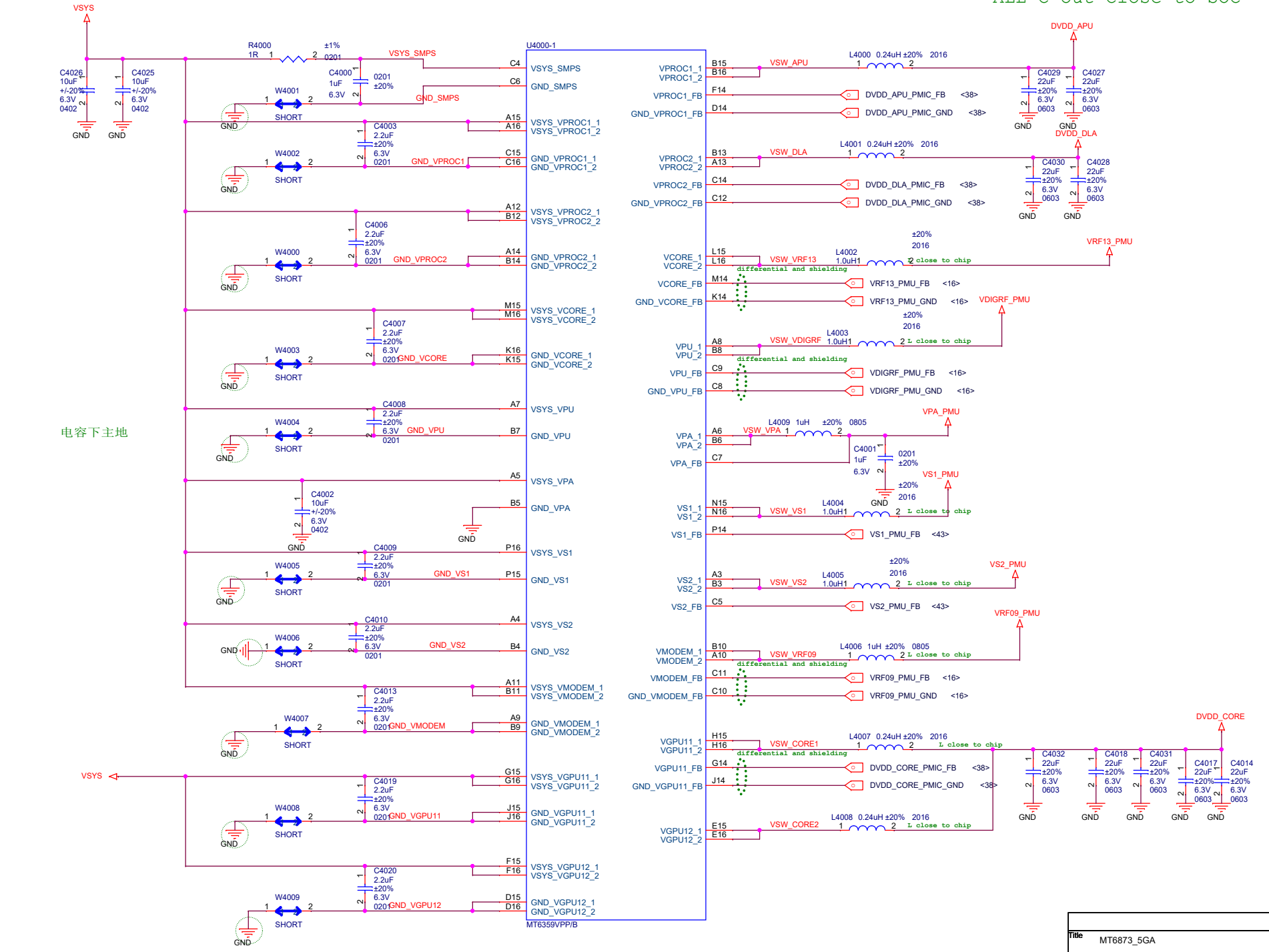

Title	MT6873_5GA
Size	A3
Document Number	MT6359_Buck
Date:	Monday, March 22, 2021

1. "Typical Cap" defined in design notice is the minimum cap. to LDO Cout.
2. NC cap can move to application, if (PCB L<20nH, PCB R<0.2mohm)
=> value and placement of Cap, please refer design notice

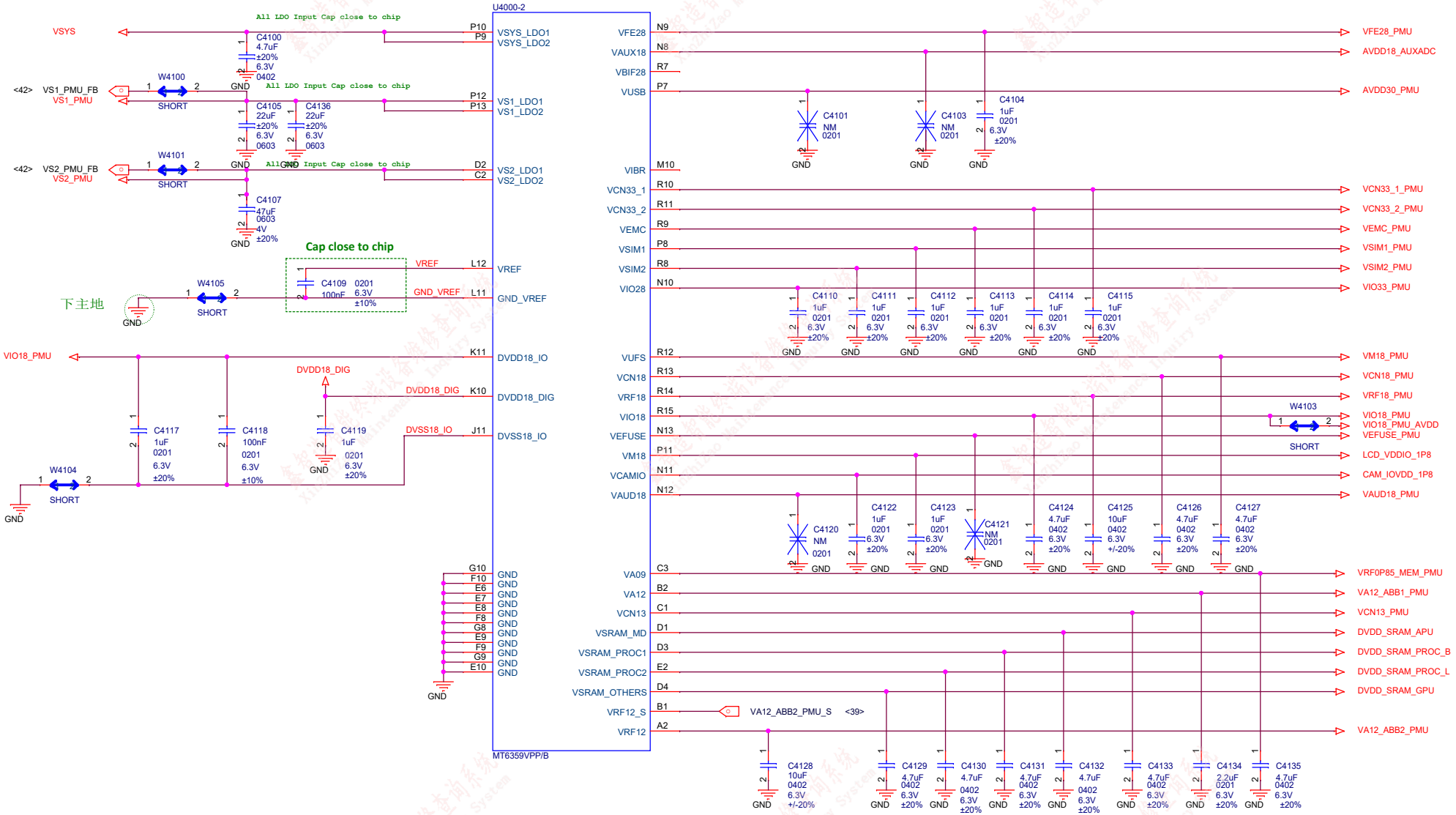

Title	MT6873_5GA
Size	A3
Document Number	MT6359_LDO
Date:	Monday, March 22, 2021

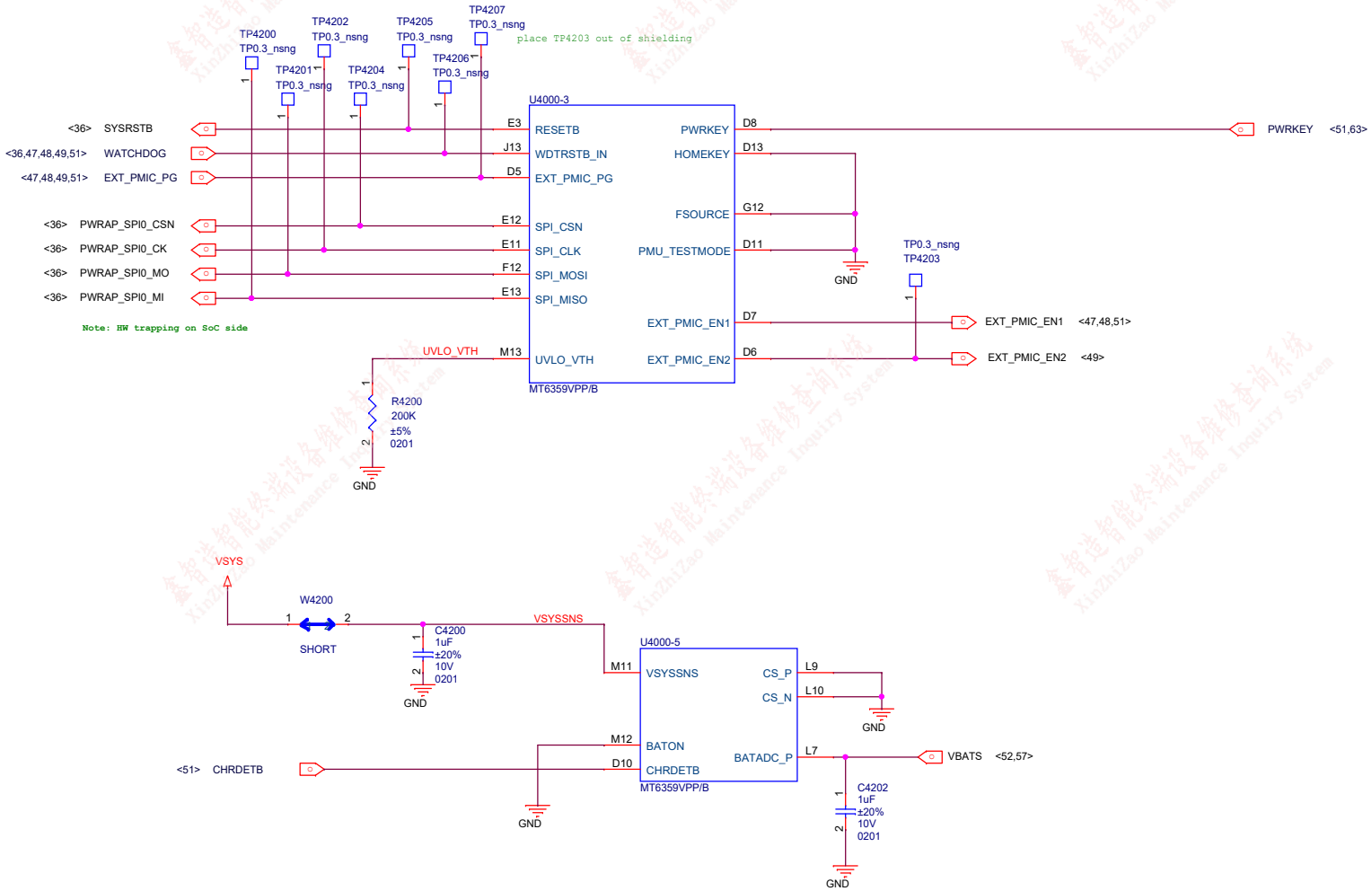

Title	MT6873_5GA
Size	A3
Document Number	MT6359_General
Date:	Monday, March 22, 2021

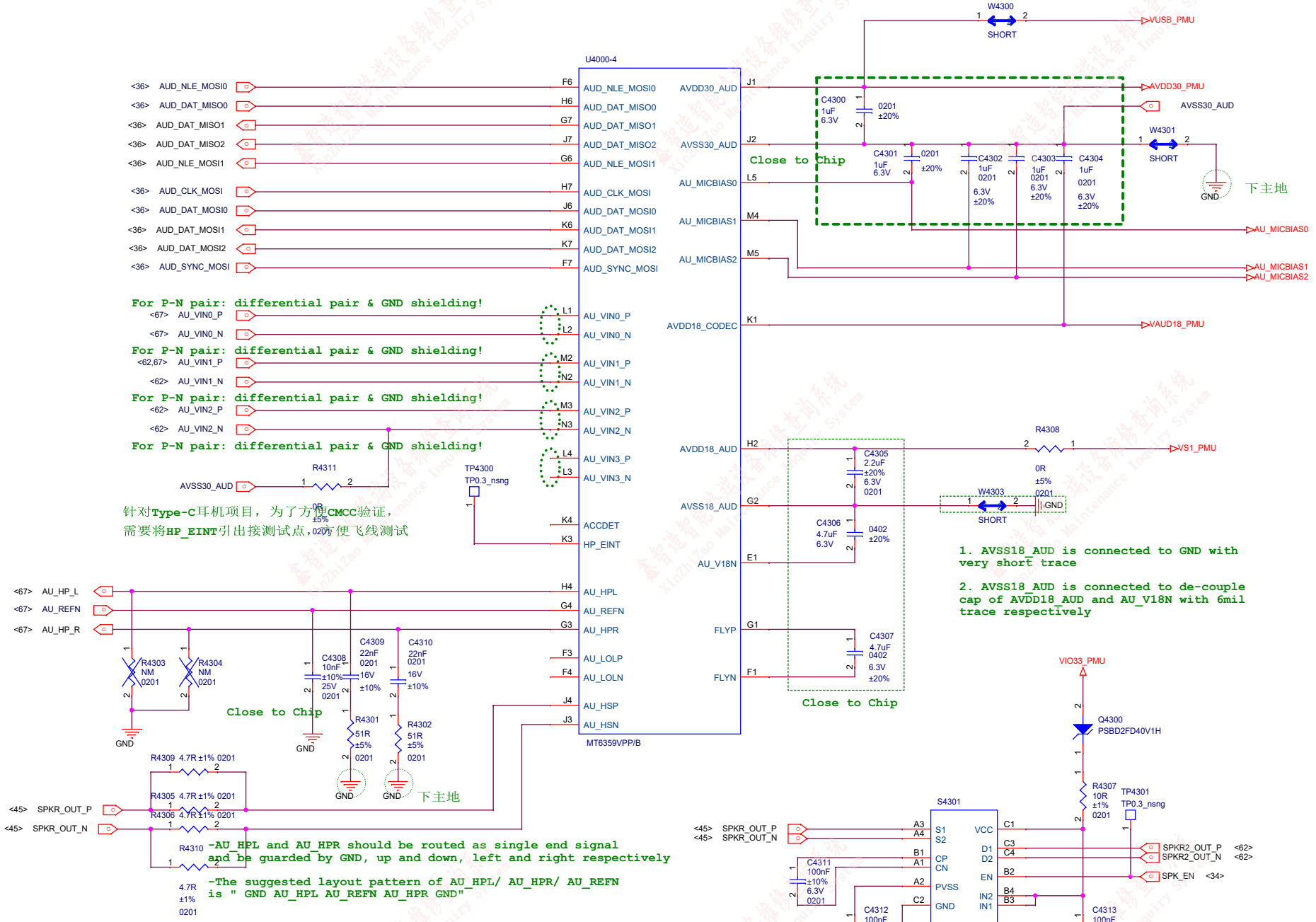

Title	MT6873_5GA
Size	A3
Document Number	MT6359_AUDIO
Date:	Monday, March 22, 2021

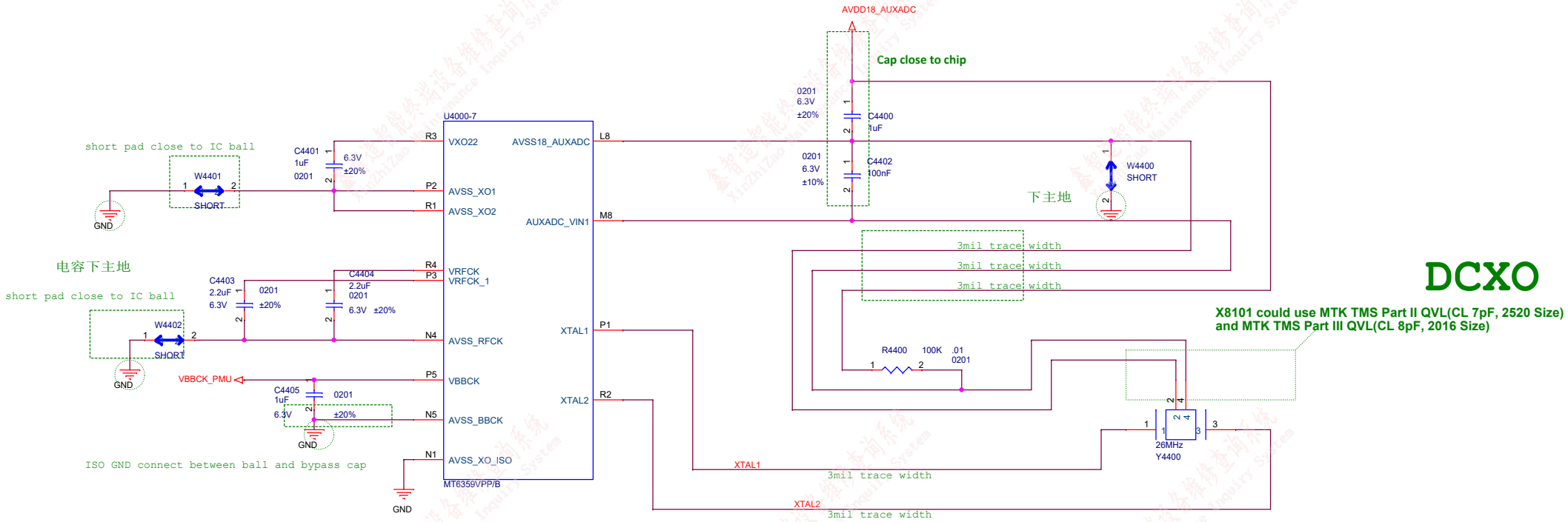

Route XTAL1/ XTAL2/ AVDD18_AUXADC/ AUXADC_VIN/ AVSS18_AUXADC with 3mils width traces and well GND shielding.

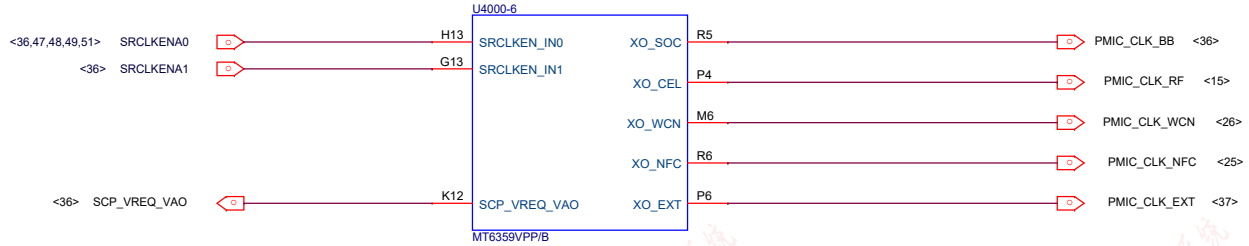

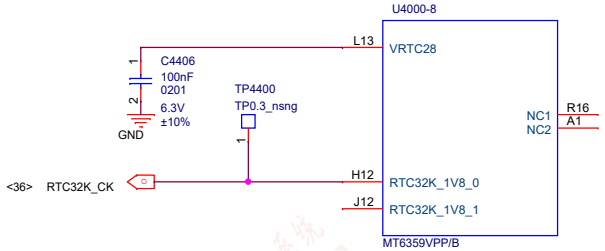

Title	MT6873_5GA
Size A3	Document Number MT6359_Clock
Date:	Monday, March 22, 2021

MT6315 4-Phase Buck (GPU)

ALL C out Close to SOC

Input cap GND connect to
chip first than to SYS GND

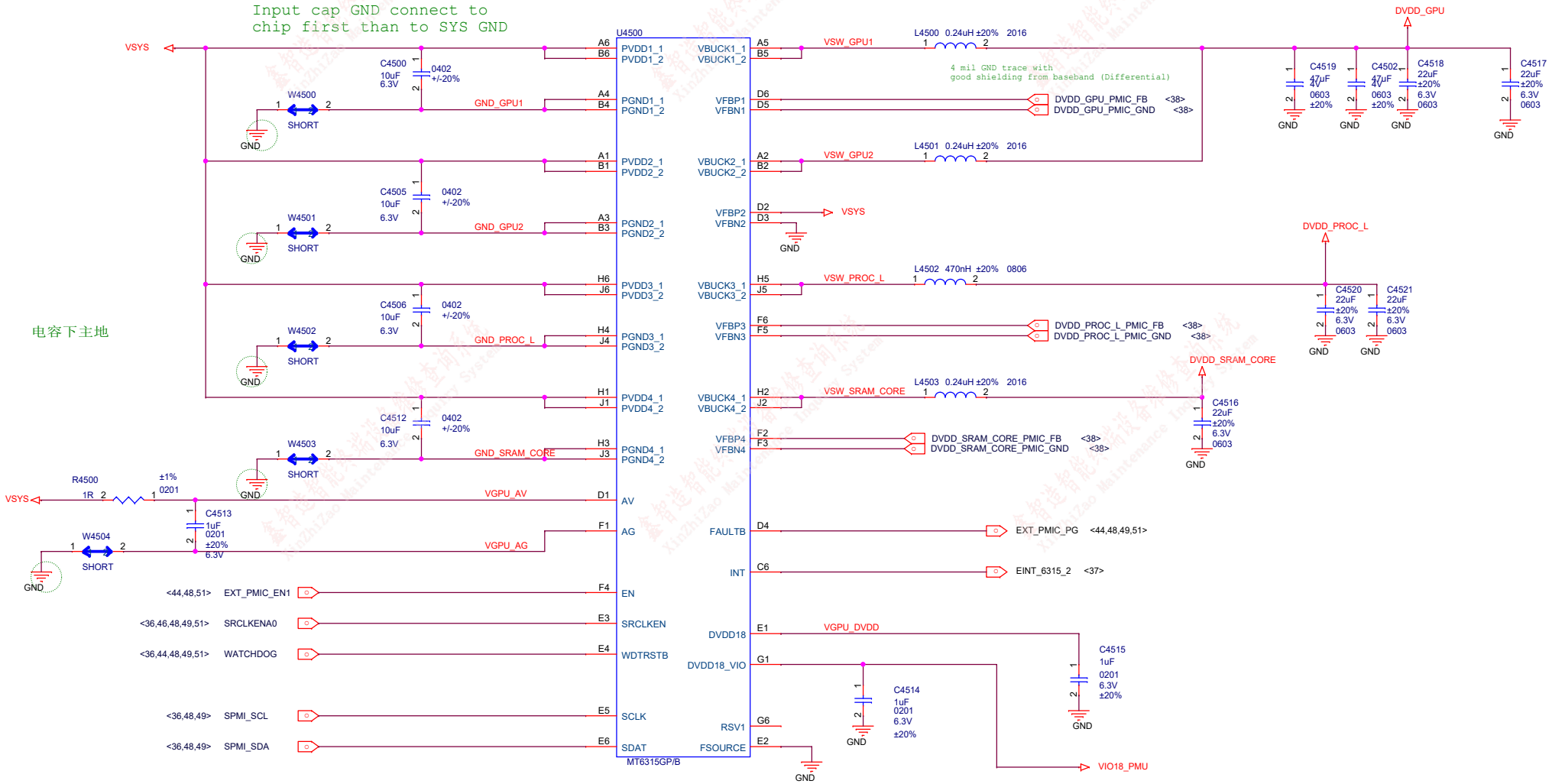

电容下主地

Title	MT6873_5GA
Size	A3
Document Number	MT6315_VGPU
Date:	Monday, March 22, 2021

MT6315 4-Phase Buck (CPU)

Input cap GND connect to
chip first than to SYS GND

ALL C out Close to SOC

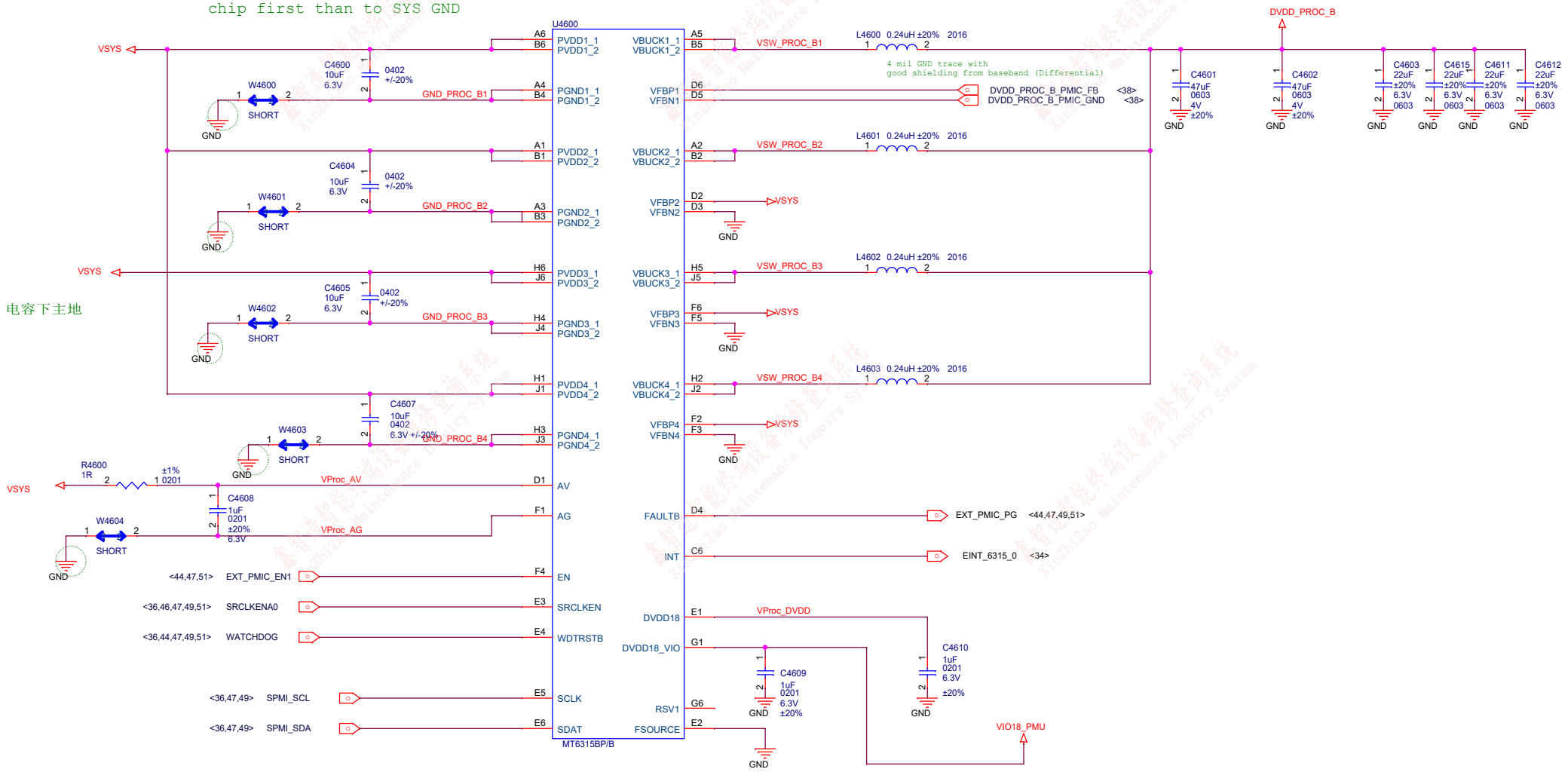

Title	MT6873_5GA
Size A3	Document Number MT6315_VCPU
Date:	Monday, March 22, 2021

MT6315 4-Phase Buck (MD)

ALL C out Close to SOC

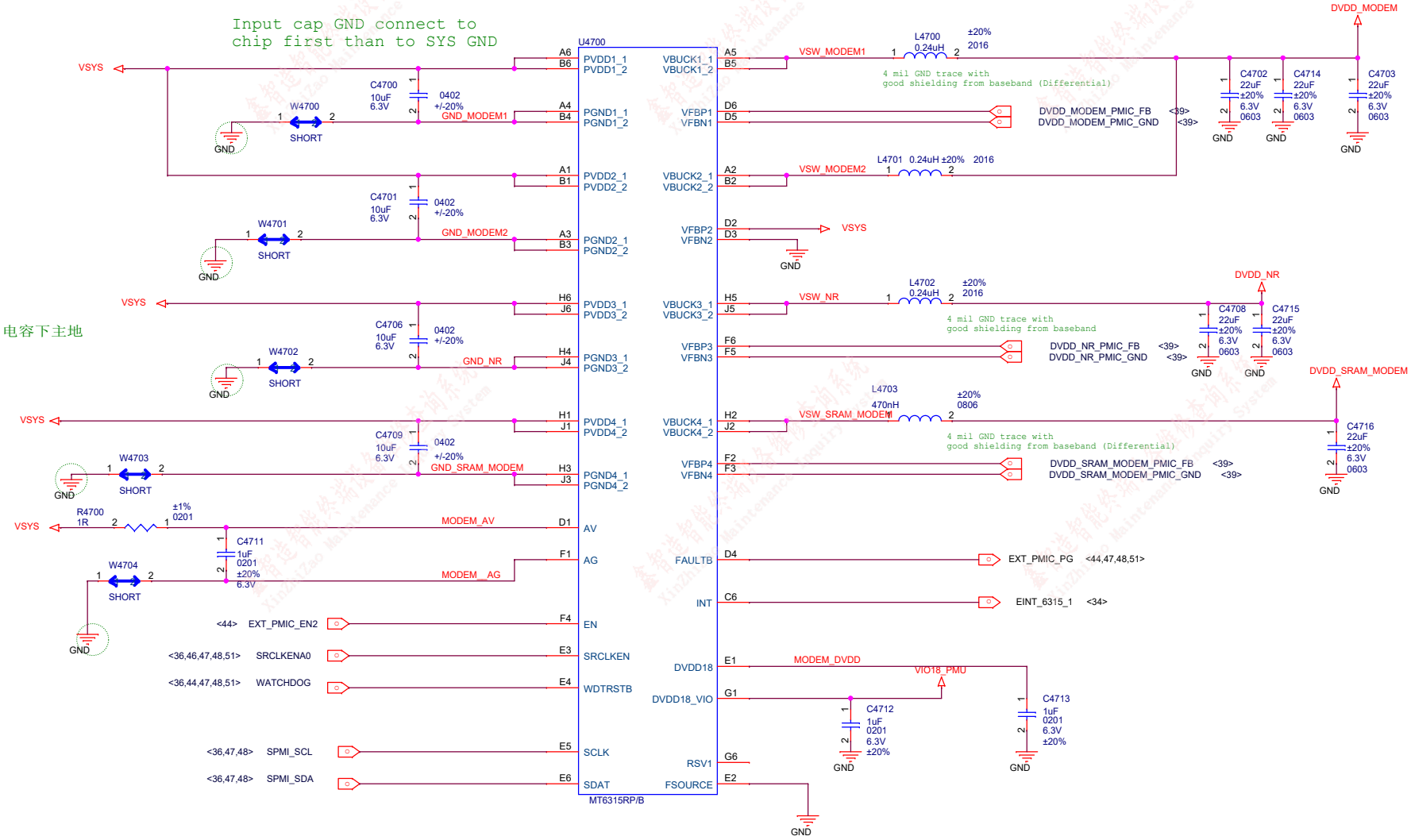

Title	MT6873_5GA
Size	A3
Document Number	MT6315_VMD
Date:	Monday, March 22, 2021

ALL C out Close to DDR

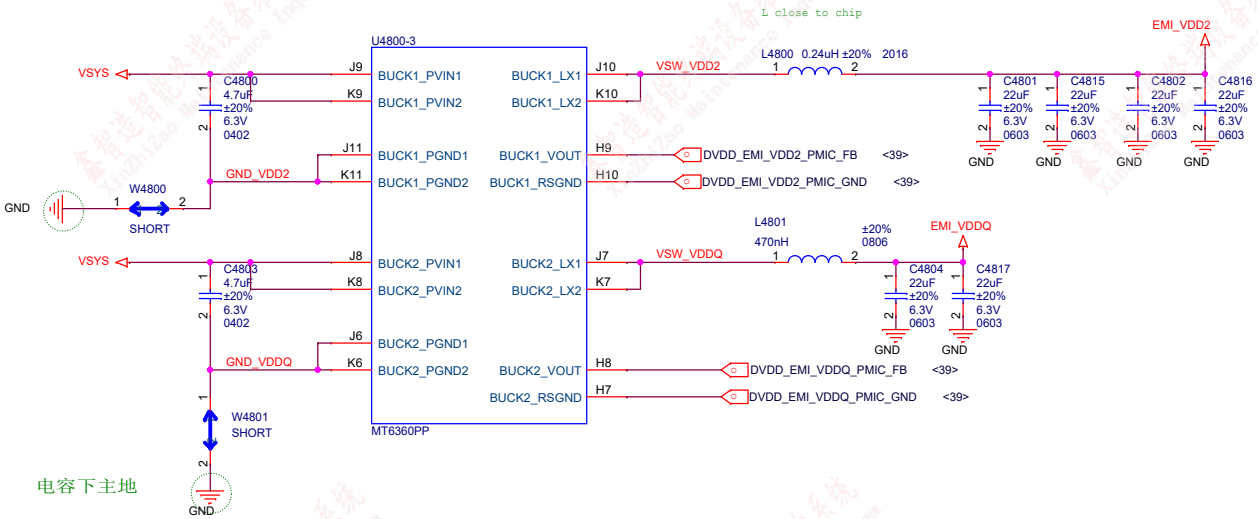

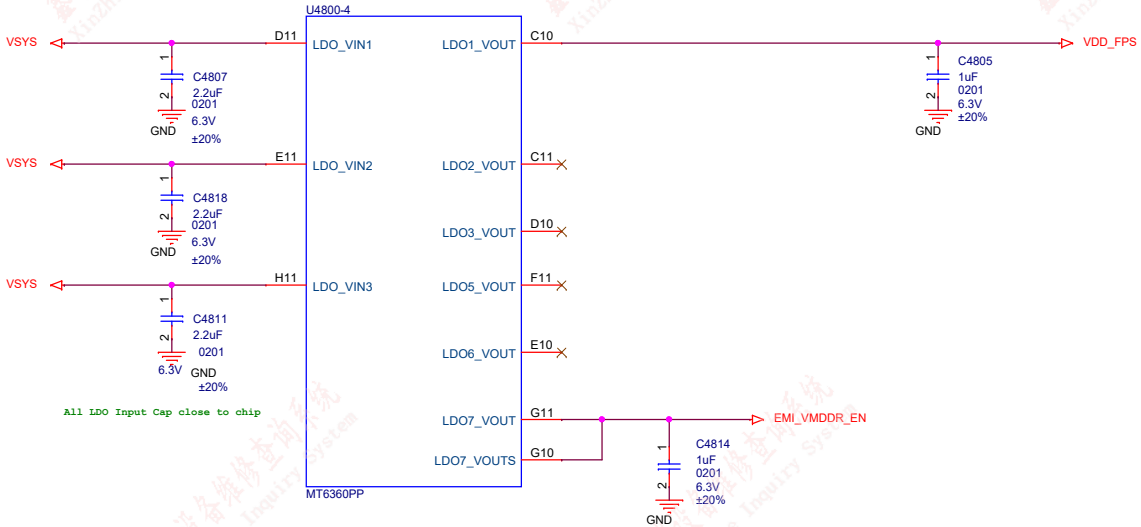

LDO1	VFP
LDO2	VTP
LDO3	VMC
LDO5	SD_CARD_2P95
LDO6	
LDO7	VMDDR_EN

Title	MT6873_5GA
Size	A3
Document Number	MT6360_BUCK_LDO
Date:	Monday, March 22, 2021

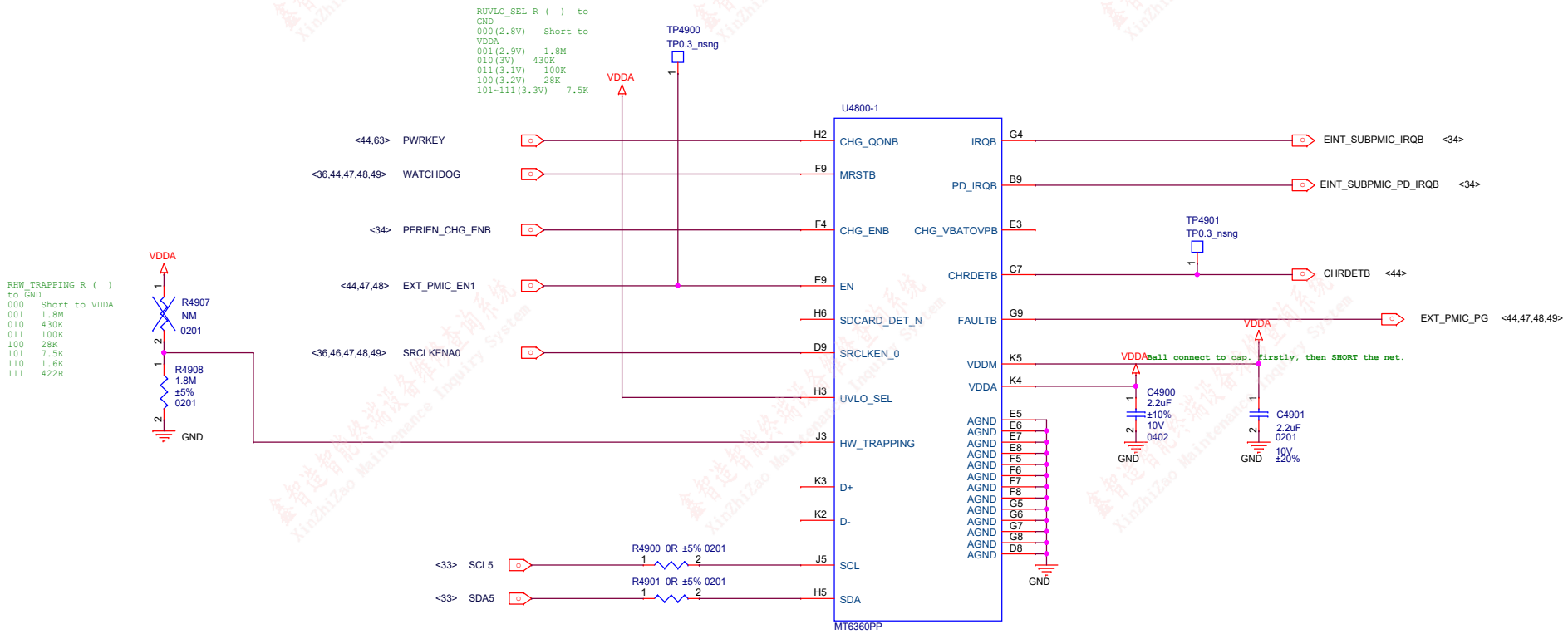

Title	MT6873_5GA
Size	A3
Document Number	MT6360_General
Date:	Monday, March 22, 2021

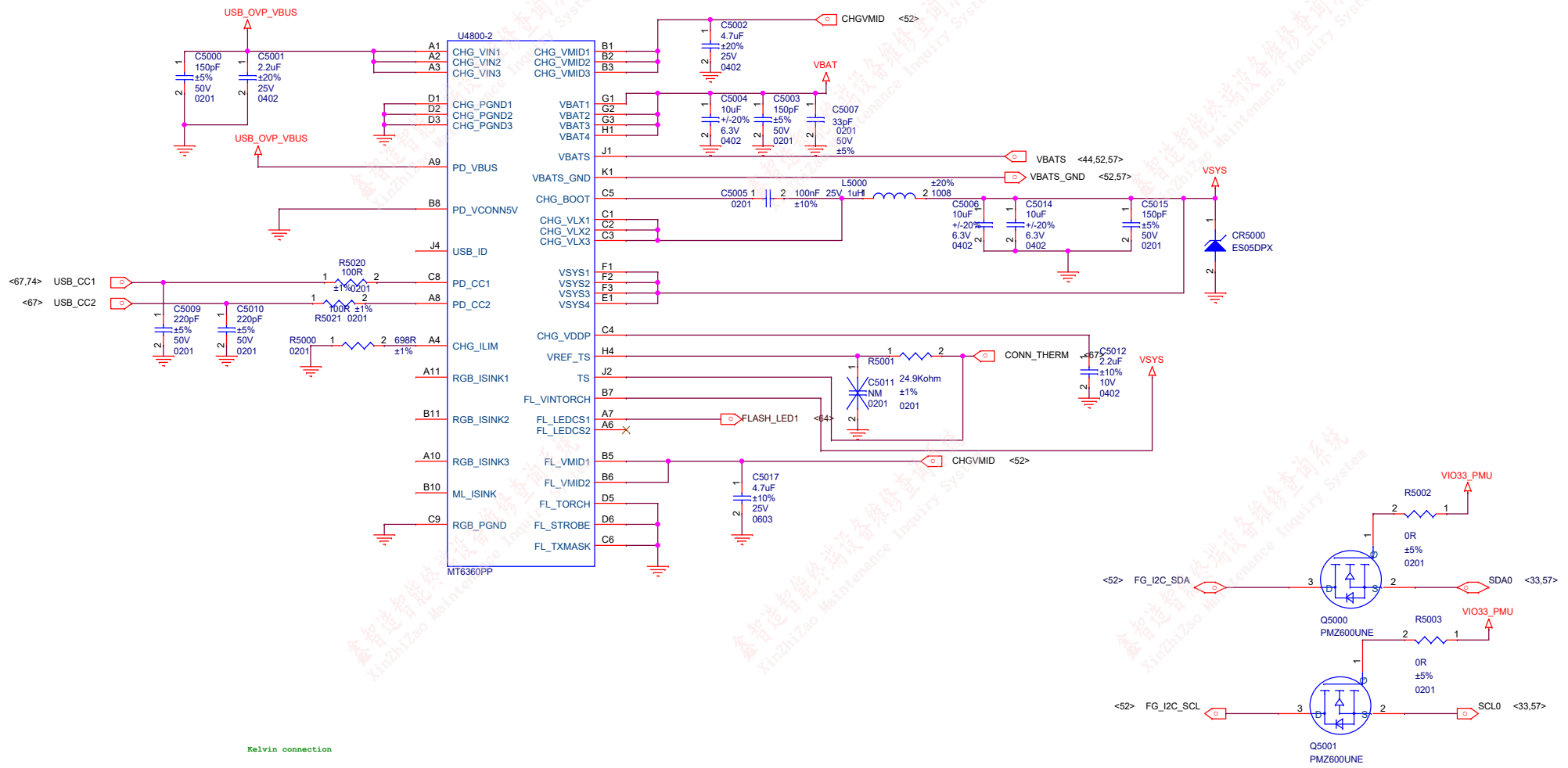

Title	MT6873_5GA
Size A3	Document Number MT6360_Charger
Date:	Monday, March 22, 2021

鑫智造智能终端设备维修查询系统
XinZhiZao Maintenance Inquiry System

MI PHONE	
Title	MT6873_5GA
Size A4	Document Number Reserved(for charger)
Date:	Monday, March 22, 2021

鑫智造智能终端设备维修查询系统
XinZhiZao Maintenance Inquiry System

Title	MT6873_5GA
Size C	Document Number Reserved(for SMB1355)
Date:	Monday, March 22, 2021

鑫智造智能终端设备维修查询系统
XinZhiZao Maintenance Inquiry System

Title	MT6873_5GA
Size C	Document Number Reserved(for SMB1355)
Date:	Monday, March 22, 2021

鑫智造智能终端设备维修查询系统
XinZhiZao Maintenance Inquiry System

Title	MT6873_5GA
Size C	Document Number Reserved(for SMB1355)
Date:	Monday, March 22, 2021

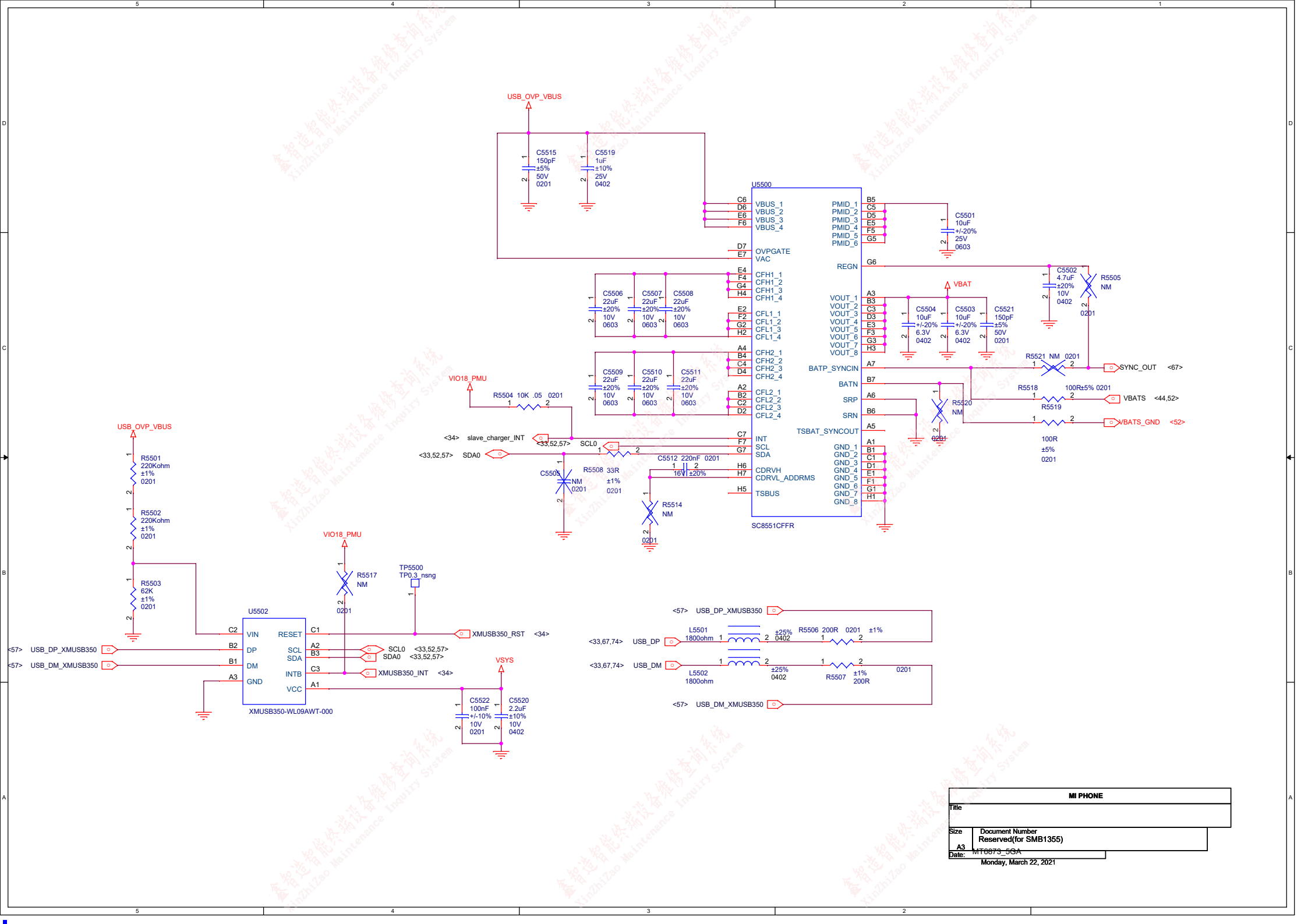

MI PHONE	
Title	
Size A3	Document Number Reserved(for SMB1355)
Date:	MT0873_5GA
	Monday, March 22, 2021

UFS 3.1

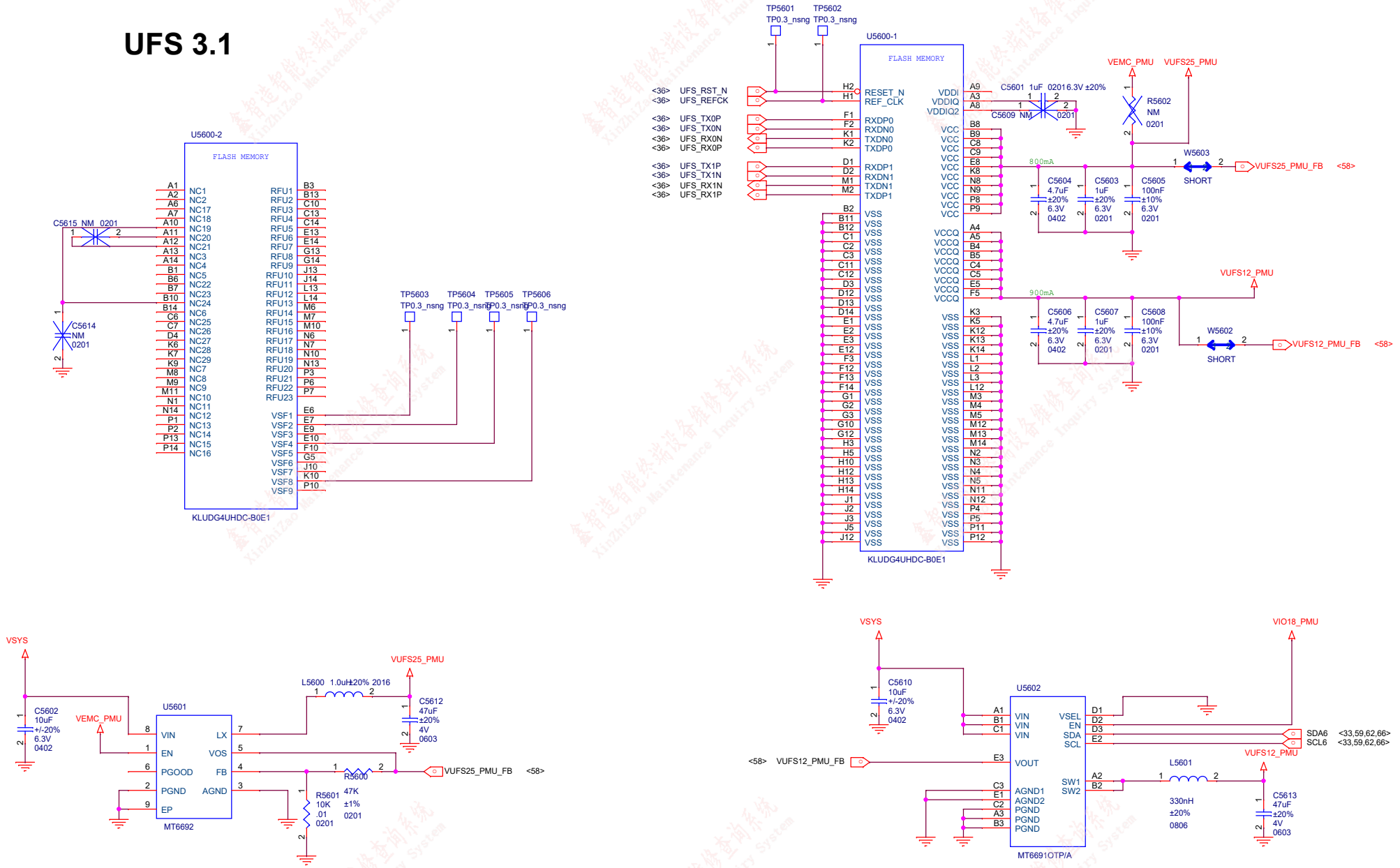

Title	Memory_1
Size A3	Document Number MEMORY
Date:	Monday, March 22, 2021

LP4X DRAM: VMDDR

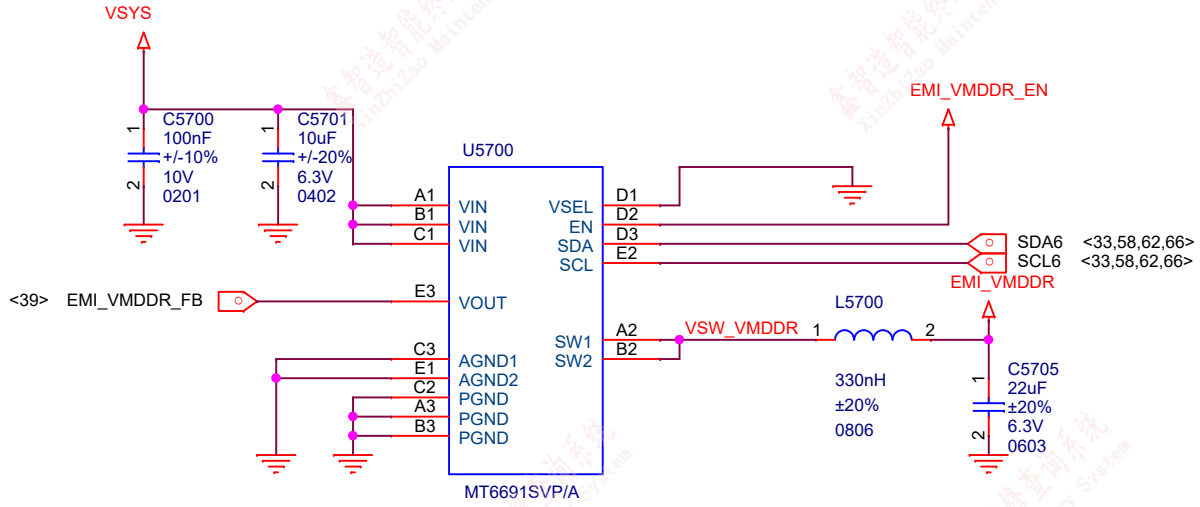

LP4X DRAM: VDD1

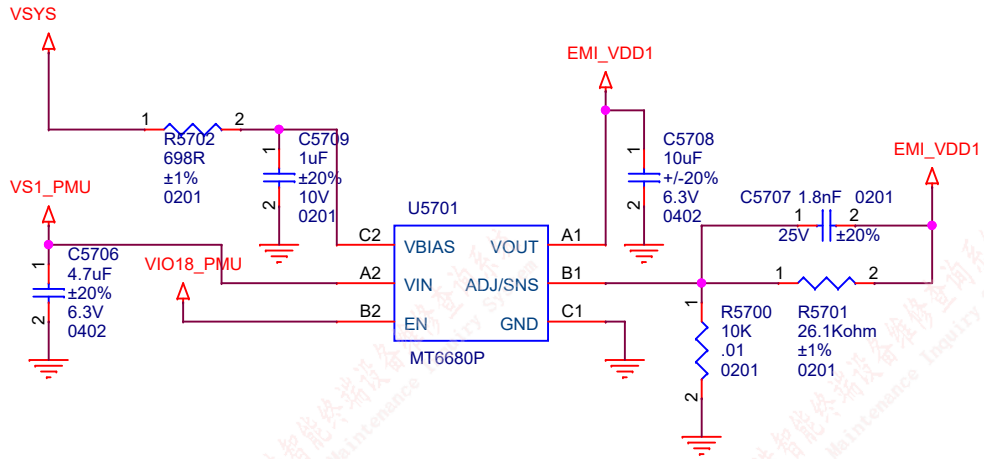

Title	
Size A4	Document Number Memory_2
Date: Monday, March 22, 2021	

鑫智造智能终端设备维修查询系统
XinZhiZao Maintenance Inquiry System

Title	MT6873_5GA
Size A3	Document Number Reserved(for WCD)
Date:	Monday, March 22, 2021

鑫智造智能终端设备维修查询系统
XinZhiZao Maintenance Inquiry System

Title	MT6873_5GA
Size A3	Document Number Reserved(for WCD)
Date:	Monday, March 22, 2021

SPK

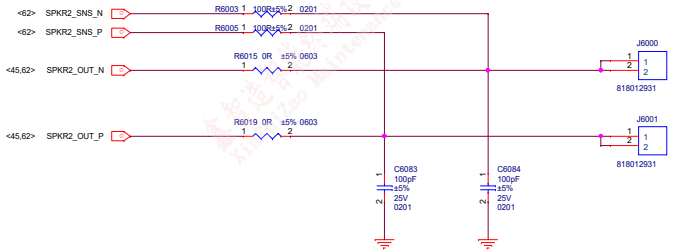

Earphone Microphone

Close to PMIC

Close to audio jack

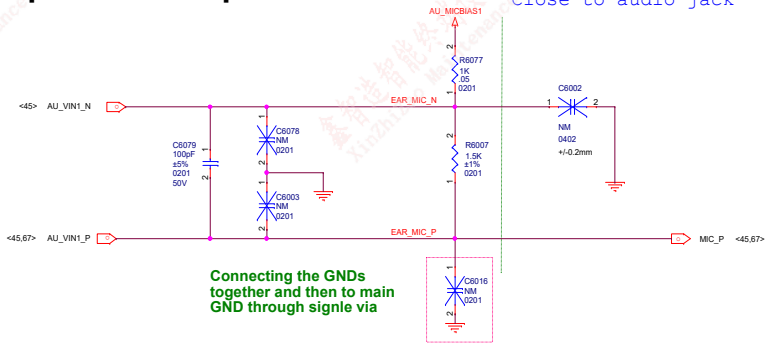

Connecting the GNDs together and then to main GND through signle via

SPKR PA

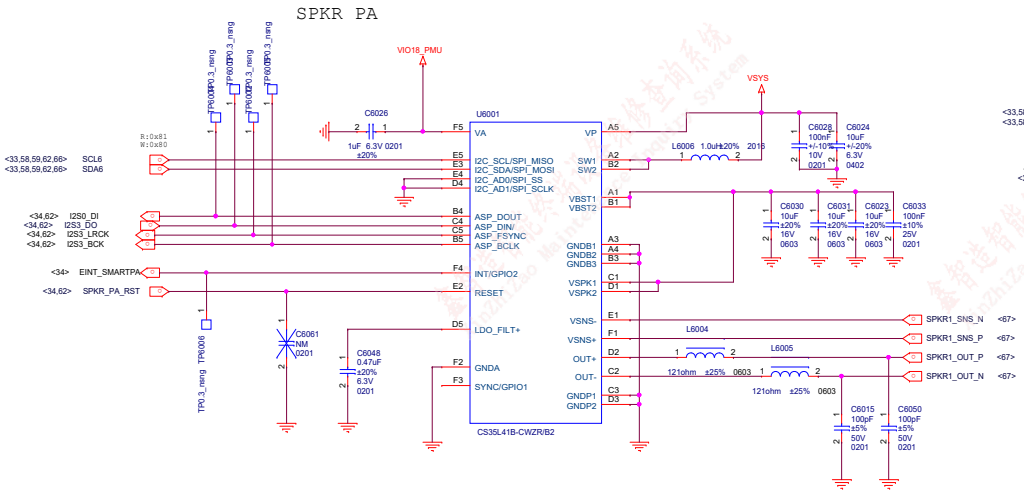

SPK2 PA

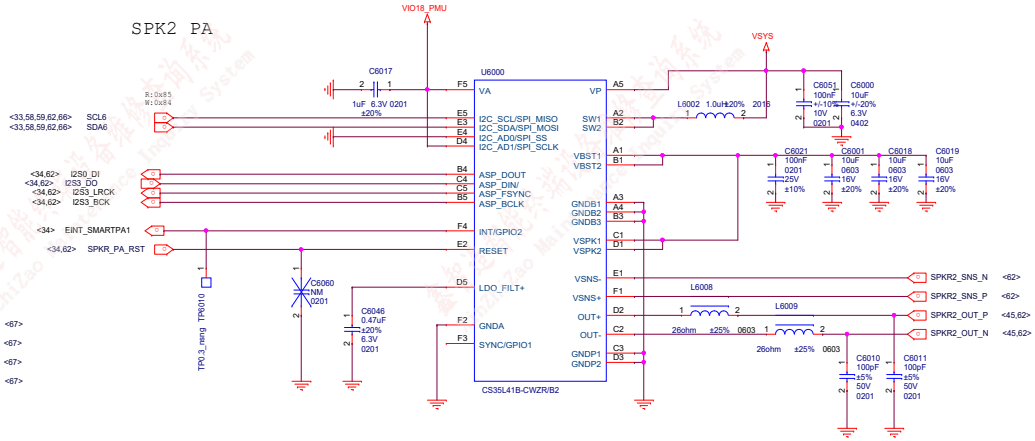

Second MIC

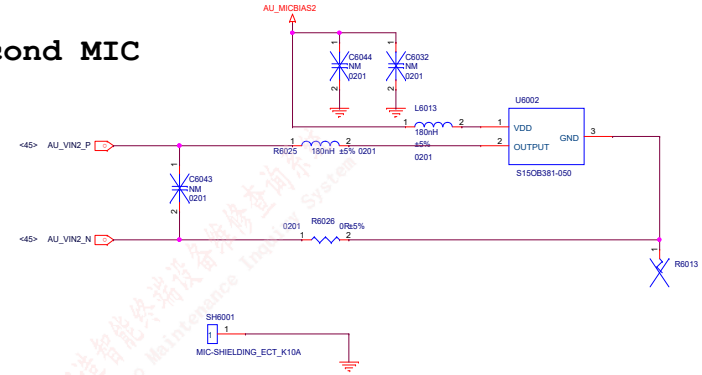

A+G1

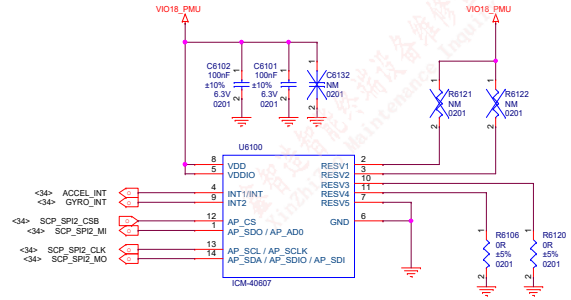

Sidekey

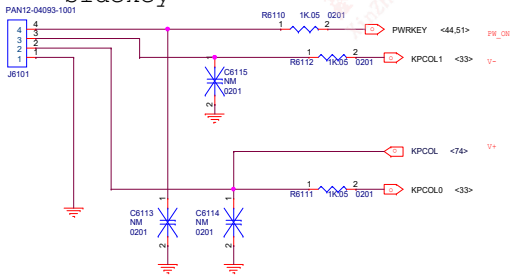

RAMDUMP debug key

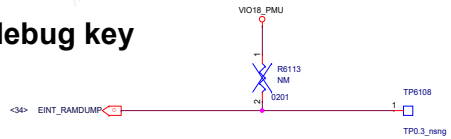

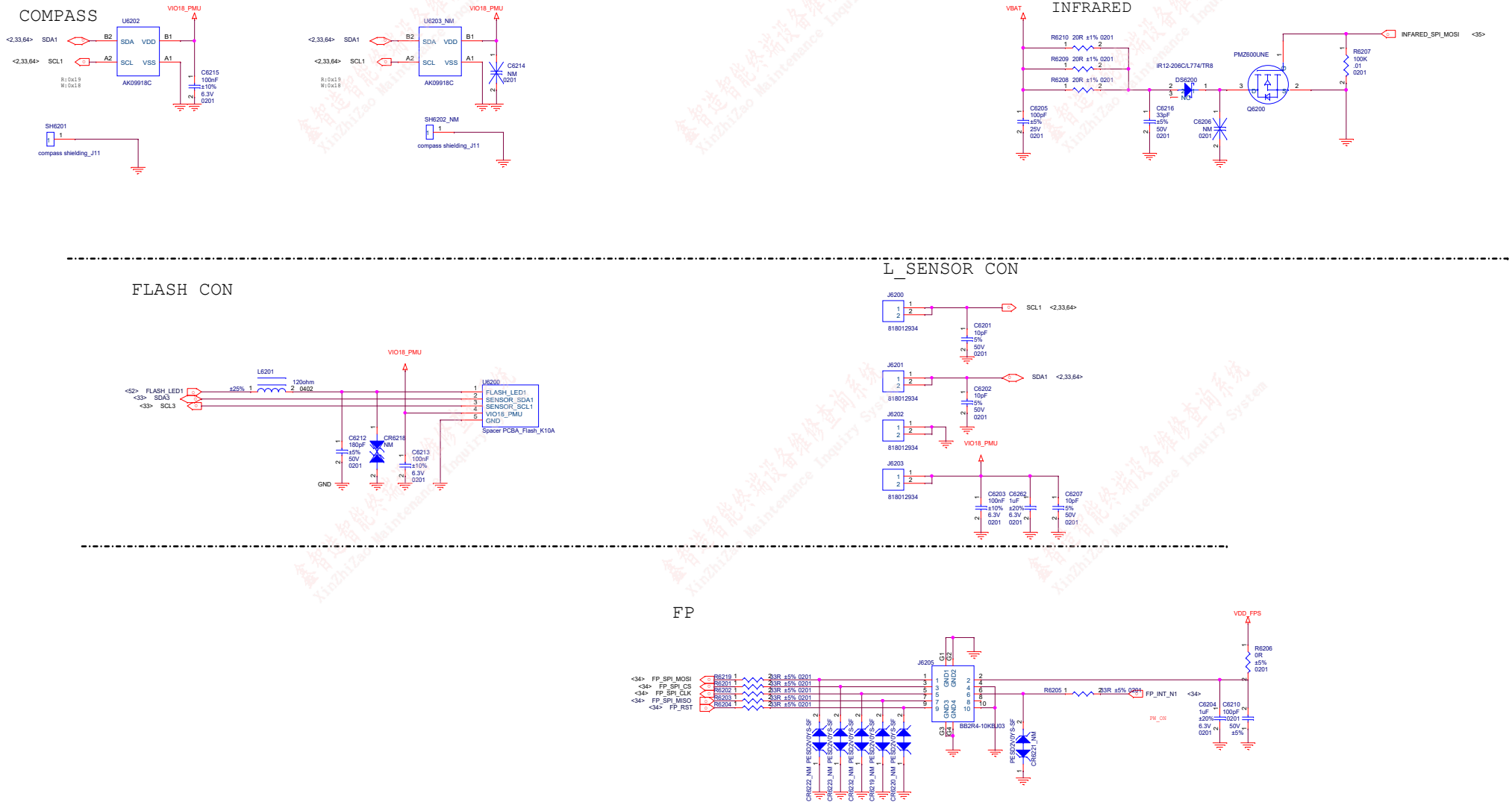
COMPASS
U6202
VIO18_PMU
<2,33,64> SDA1
<2,33,64> SCL1
B2
A2
B1
A1
SDA
SCL
VDD
VSS
AK09918C
R:0x19
W:0x18
C6215
100nF
±10%
6.3V
0201
SH6201
compass shielding_J11
U6203_NM
C6214
NM
0201
SH6202_NM
compass shielding_J11
INFRARED
VBAT
R6210 20R ±1% 0201
R6209 20R ±1% 0201
R6208 20R ±1% 0201
IR12-206C/L774/TR8
DS6200
NM
PMZ600UNE
Q6200
C6205
100pF
±5%
25V
0201
C6216
33pF
±5%
50V
0201
C6206
NM
0201
R6207
100K
.01
0201
INFRARED_SPI_MOSI <35>
FLASH CON
L6201
120ohm
0402
±25%
<52> FLASH_LED1
<33> SDA3
<33> SCL3
U6200
FLASH_LED1
SENSOR_SDA1
SENSOR_SCL1
VIO18_PMU
GND
Spacer PCBA_Flash_K10A
C6212
180pF
±5%
50V
0201
CR6218
NM
C6213
100nF
±10%
6.3V
0201
GND
L_SENSOR CON
J6200
818012934
SCL1 <2,33,64>
C6201
10pF
±5%
50V
0201
J6201
SDA1 <2,33,64>
C6202
10pF
±5%
50V
0201
J6202
VIO18_PMU
J6203
C6203
100nF
±10%
6.3V
0201
C6262
1uF
±20%
6.3V
0201
C6207
10pF
±5%
50V
0201
FP
VDD_FPS
<34> FP_SPI_MOSI
<34> FP_SPI_CS
<34> FP_SPI_CLK
<34> FP_SPI_MISO
<34> FP_RST
R6219 1
R6201 1
R6202 1
R6203 1
R6204 1
23R ±5% 0201
J6205
BB2R4-10KBJ03
PESD2CAN-S-SF
CR622_NM
R6205 1
23R ±5% 0201
FP_INT_N1 <34>
PM_ON
R6206
0R
±5%
0201
C6204
1uF
±20%
6.3V
0201
C6210
100pF
0201
50V
±5%

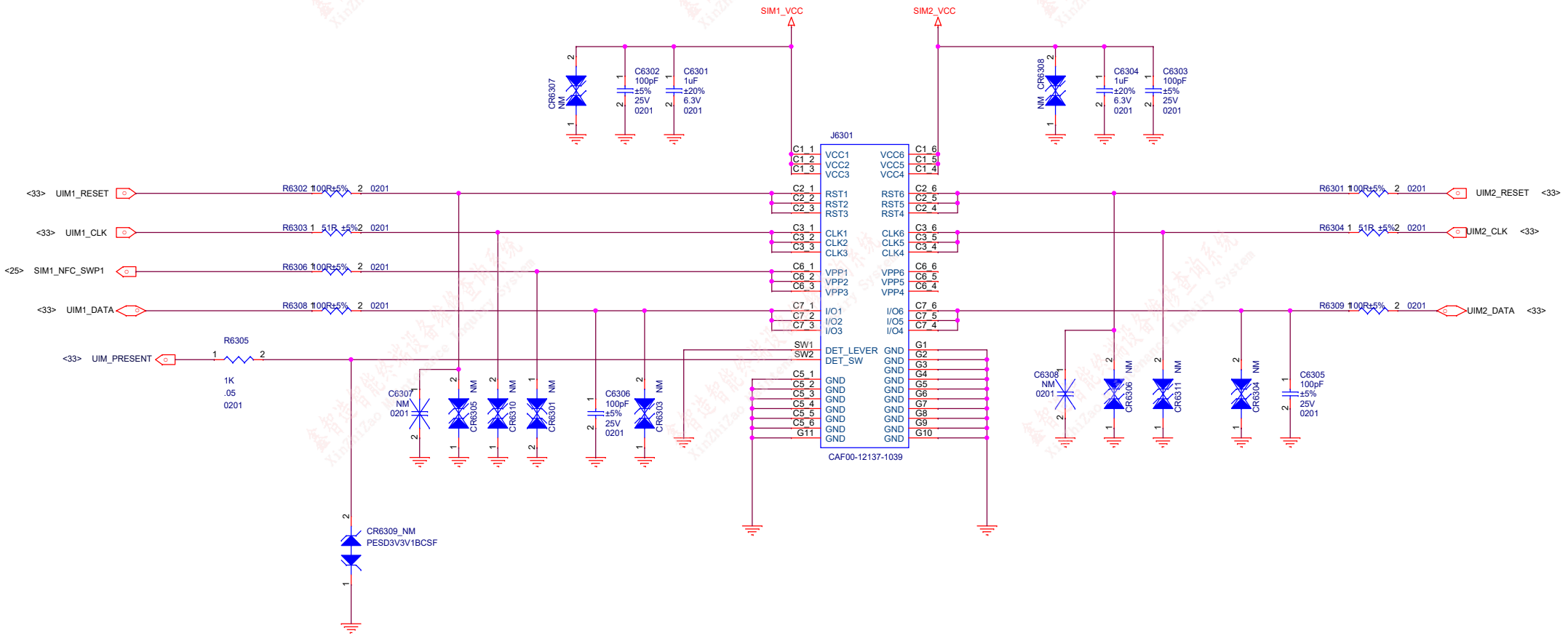

Title	MT6873_5GA
Size A3	Document Number SIM CONNECTOR
Date:	

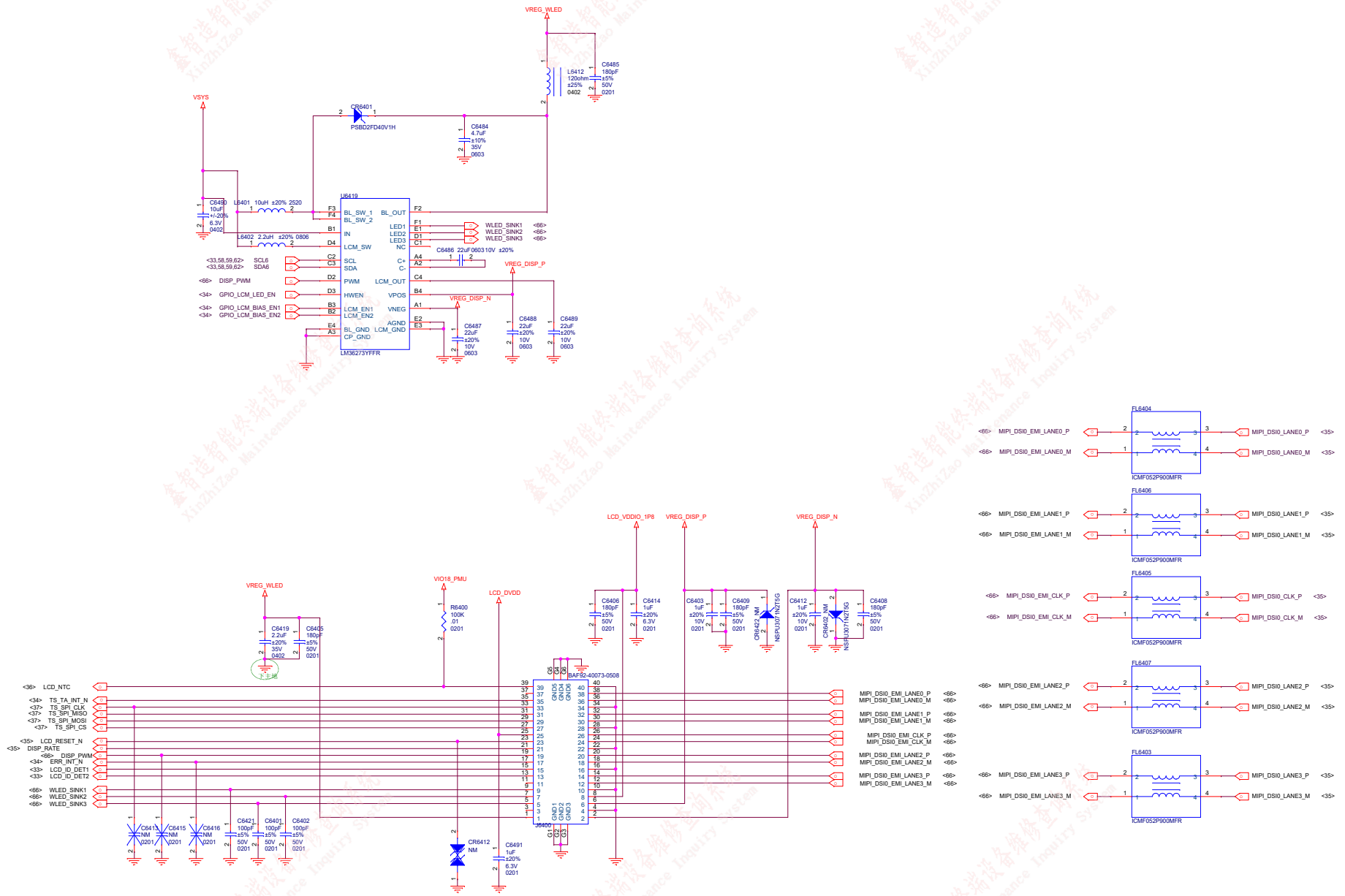
VREG_WLED
L6412
120ohm
±25%
0402
C6485
180pF
±5%
50V
0201
VSYS
CR6401
PSBD2FD40V1H
C6484
4.7uF
±10%
35V
0603
C6480
10uF
+/-20%
6.3V
0402
L6401 10uH ±20% 2520
L6402 2.2uH ±20% 0806
U6419
BL_SW_1
BL_SW_2
IN
LCM_SW
SCL
SDA
PWM
HWEN
LCM_EN1
LCM_EN2
BL_GND
CP_GND
BL_OUT
LED1
LED2
LED3
NC
C+
C-
LCM_OUT
VPOS
VNEG
AGND
LCM_GND
LM36273YFFR
WLED_SINK1 <66>
WLED_SINK2 <66>
WLED_SINK3 <66>
C6486 22uF 0603 10V ±20%
VREG_DISP_P
VREG_DISP_N
<33,58,59,62> SCL6
<33,58,59,62> SDA6
<66> DISP_PWM
<34> GPIO_LCM_LED_EN
<34> GPIO_LCM_BIAS_EN1
<34> GPIO_LCM_BIAS_EN2
C6487
22uF
±20%
10V
0603
C6488
22uF
±20%
10V
0603
C6489
22uF
±20%
10V
0603
VREG_WLED
C6419
2.2uF
±20%
35V
0402
C6405
180pF
±5%
50V
0201
下主地
VIO18_PMU
R6400
100K
.01
0201
LCD_DVDD
LCD_VDDIO_1P8
VREG_DISP_P
VREG_DISP_N
C6406
180pF
±5%
50V
0201
C6414
1uF
±20%
6.3V
0201
C6403
1uF
±20%
10V
0201
C6409
180pF
±5%
50V
0201
CR6423
NM
NSPU307/NZ15G
C6412
1uF
±20%
10V
0201
CR6402
NM
NSPU307/NZ15G
C6408
180pF
±5%
50V
0201
BAF82-40073-0508
J6400
<36> LCD_NTC
<34> TS_TA_INT_N
<37> TS_SPI_CLK
<37> TS_SPI_MISO
<37> TS_SPI_MOSI
<37> TS_SPI_CS
<35> LCD_RESET_N
<35> DISP_RATE
<66> DISP_PWM
<34> ERR_INT_N
<33> LCD_ID_DET1
<33> LCD_ID_DET2
<66> WLED_SINK1
<66> WLED_SINK2
<66> WLED_SINK3
C6413
NM
0201
C6415
NM
0201
C6416
NM
0201
C6421
100pF
±5%
50V
0201
C6401
100pF
±5%
50V
0201
C6402
100pF
±5%
50V
0201
CR6412
NM
C6491
1uF
±20%
6.3V
0201
MIPI_DSI0_EMI_LANE0_P <66>
MIPI_DSI0_EMI_LANE0_M <66>
MIPI_DSI0_EMI_LANE1_P <66>
MIPI_DSI0_EMI_LANE1_M <66>
MIPI_DSI0_EMI_CLK_P <66>
MIPI_DSI0_EMI_CLK_M <66>
MIPI_DSI0_EMI_LANE2_P <66>
MIPI_DSI0_EMI_LANE2_M <66>
MIPI_DSI0_EMI_LANE3_P <66>
MIPI_DSI0_EMI_LANE3_M <66>
FL6404
ICMF052P900MFR
<66> MIPI_DSI0_EMI_LANE0_P
<66> MIPI_DSI0_EMI_LANE0_M
MIPI_DSI0_LANE0_P <35>
MIPI_DSI0_LANE0_M <35>
FL6406
ICMF052P900MFR
<66> MIPI_DSI0_EMI_LANE1_P
<66> MIPI_DSI0_EMI_LANE1_M
MIPI_DSI0_LANE1_P <35>
MIPI_DSI0_LANE1_M <35>
FL6405
ICMF052P900MFR
<66> MIPI_DSI0_EMI_CLK_P
<66> MIPI_DSI0_EMI_CLK_M
MIPI_DSI0_CLK_P <35>
MIPI_DSI0_CLK_M <35>
FL6407
ICMF052P900MFR
<66> MIPI_DSI0_EMI_LANE2_P
<66> MIPI_DSI0_EMI_LANE2_M
MIPI_DSI0_LANE2_P <35>
MIPI_DSI0_LANE2_M <35>
FL6403
ICMF052P900MFR
<66> MIPI_DSI0_EMI_LANE3_P
<66> MIPI_DSI0_EMI_LANE3_M
MIPI_DSI0_LANE3_P <35>
MIPI_DSI0_LANE3_M <35>

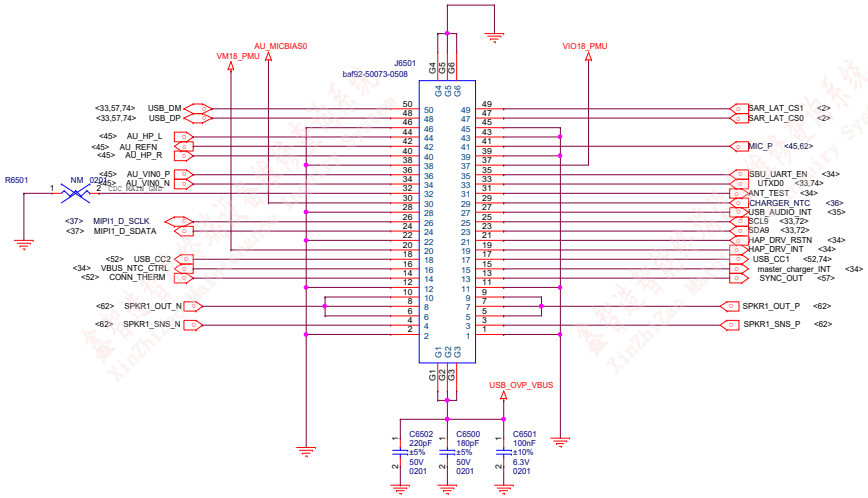
J6501
baf92-50073-0508
VM18_PMU
AU_MICBIAS0
VIO18_PMU
USB_OVP_VBUS
<33,57,74> USB_DM
<33,57,74> USB_DP
<45> AU_HP_L
<45> AU_REFN
<45> AU_HP_R
R6501
NM_0201
<45> AU_VIN0_P
<45> AU_VIN0_N
<37> MIPI1_D_SCLK
<37> MIPI1_D_SDATA
<52> USB_CC2
<34> VBUS_NTC_CTRL
<52> CONN_THERM
<62> SPKR1_OUT_N
<62> SPKR1_SNS_N
SAR_LAT_CS1 <2>
SAR_LAT_CS0 <2>
MIC_P <45,62>
SBU_UART_EN <34>
UTXD0 <33,74>
ANT_TEST <34>
CHARGER_NTC <36>
USB_AUDIO_INT <35>
SCL9 <33,72>
SDA9 <33,72>
HAP_DRV_RSTN <34>
HAP_DRV_INT <34>
USB_CC1 <52,74>
master_charger_INT <34>
SYNC_OUT <57>
SPKR1_OUT_P <62>
SPKR1_SNS_P <62>
C6502
220pF
±5%
50V
0201
C6500
180pF
±5%
50V
0201
C6501
100nF
±10%
6.3V
0201

WIDE 64M IMX686

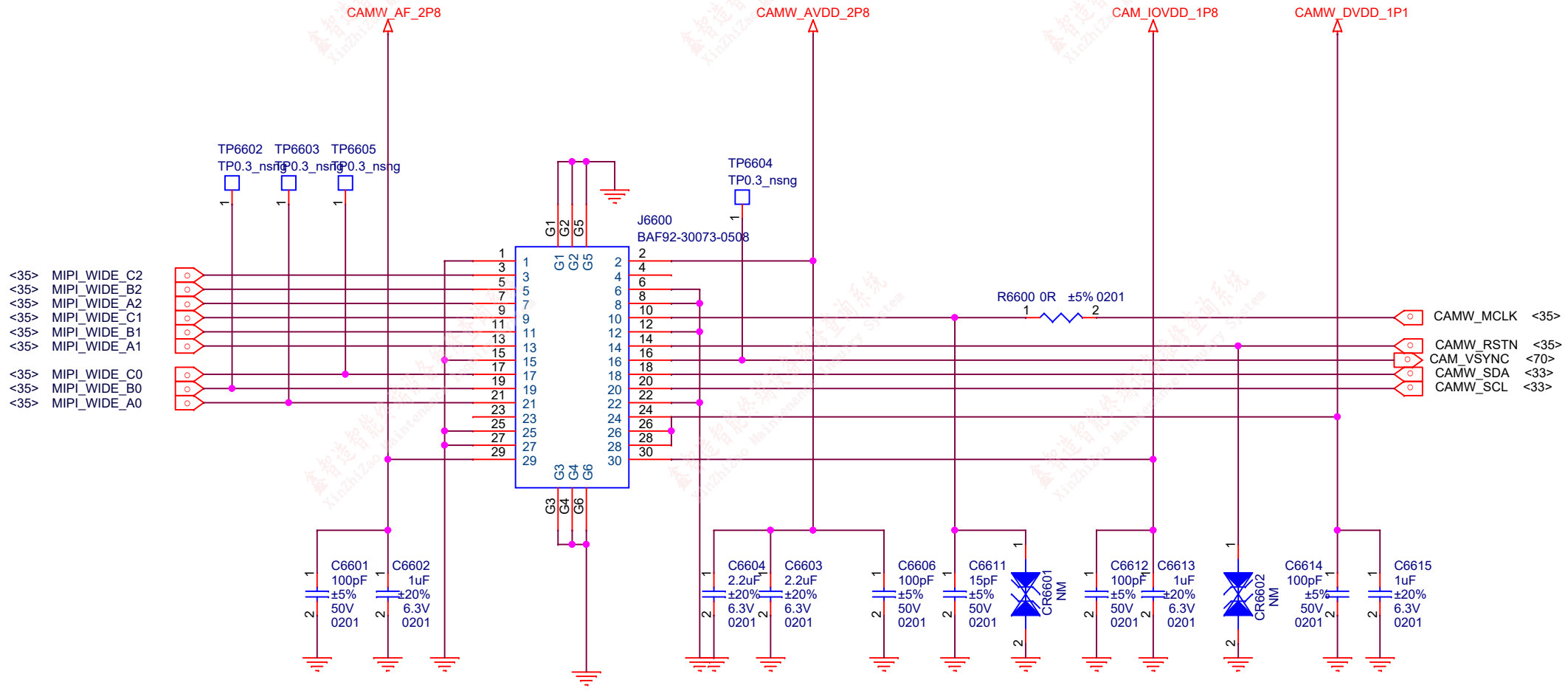

Title	J11 MAIN
Size A4	Document Number WIDE&TELE CAMERA
Date:	Monday, March 22, 2021

front 16M S5K3T2

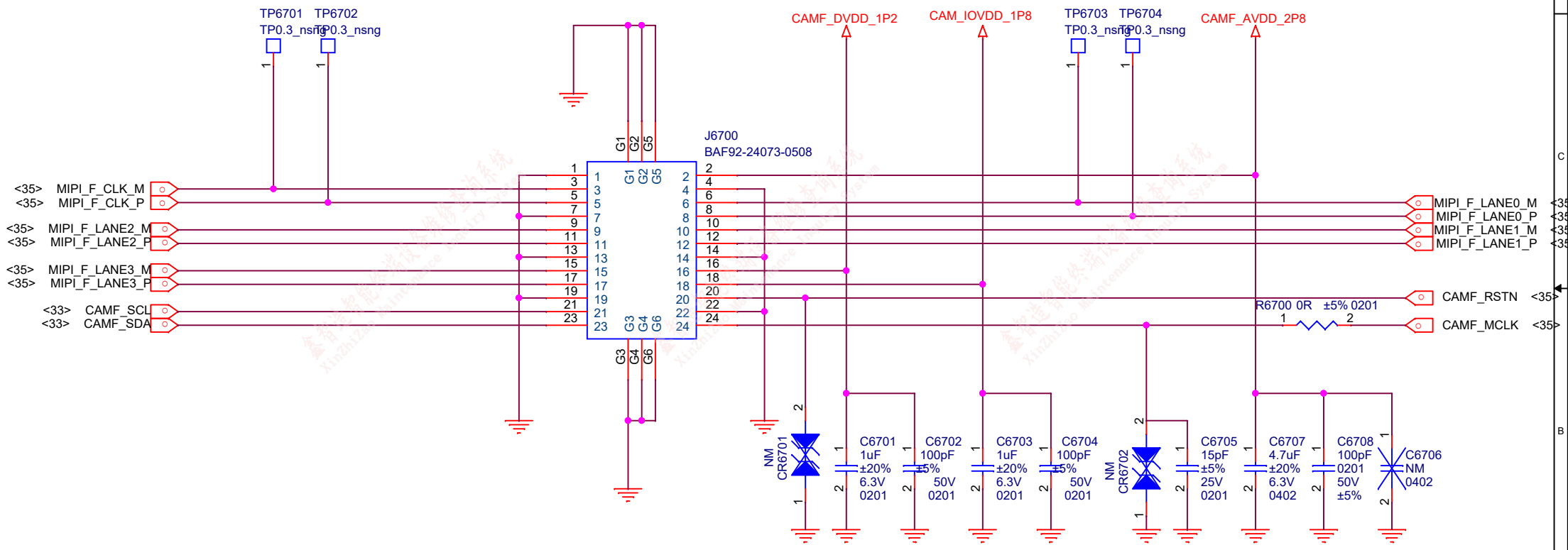

Title	J11 MAIN
Size A4	Document Number Reserved(for Analog FM)
Date:	Monday, March 22, 2021

ULTRA 8M IMX355

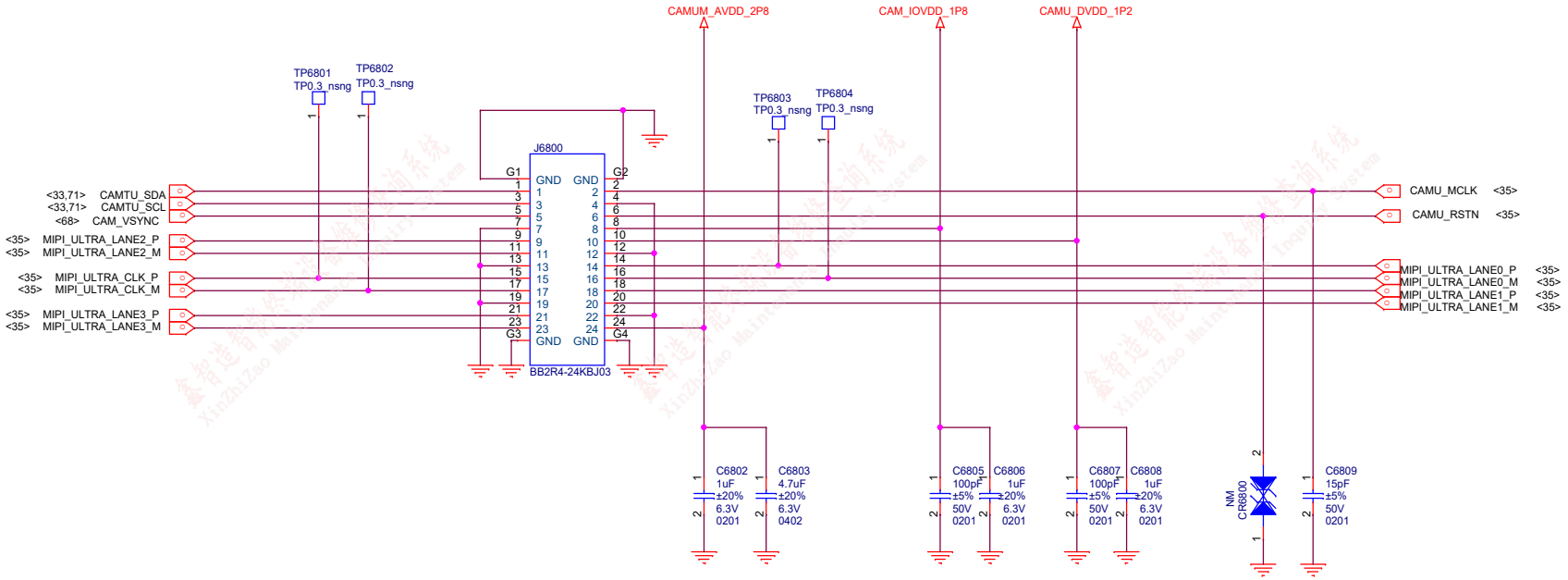

Title	J11 MAIN
Size A3	Document Number ULTRA CAMERA
Date:	Monday, March 22, 2021

MACRO 2M

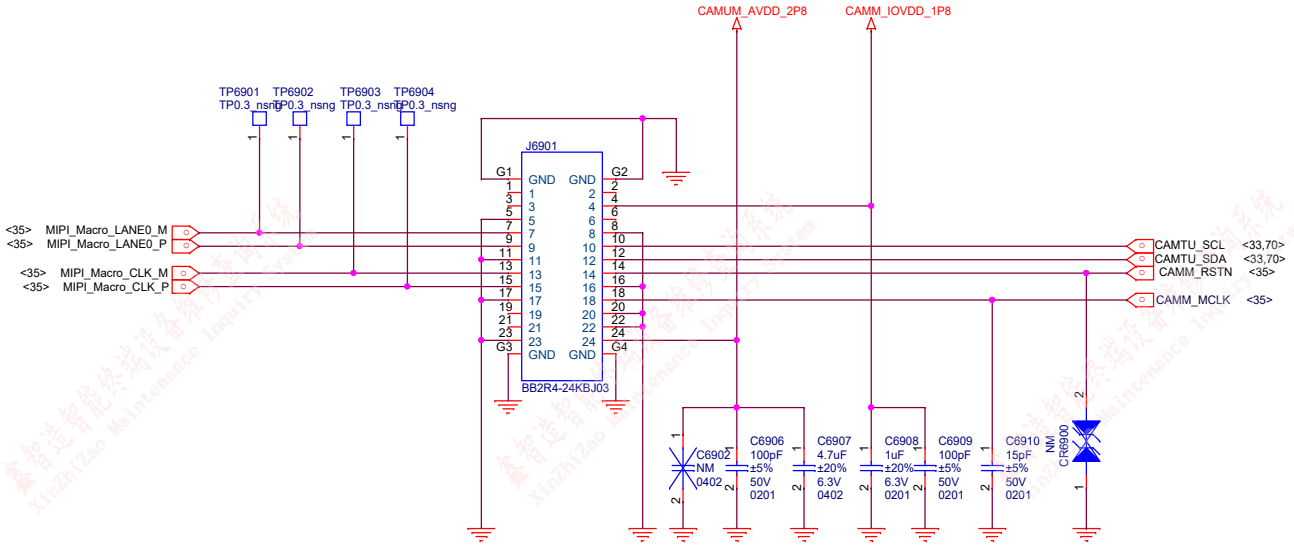

Title	J11 MAIN
Size A3	Document Number ULTRA CAMERA
Date:	Monday, March 22, 2021

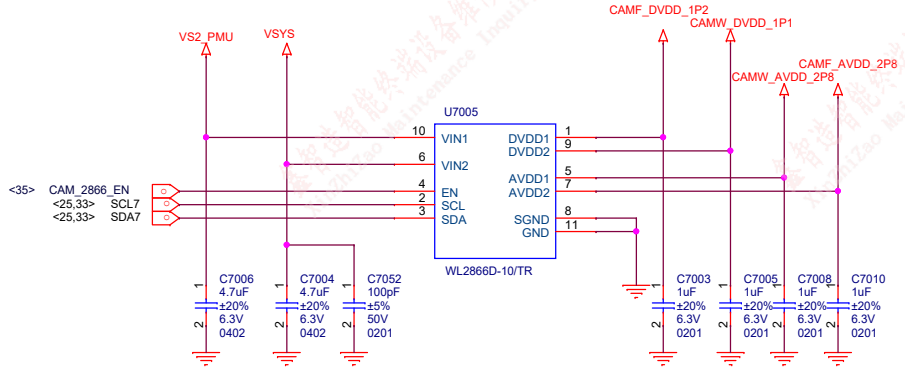

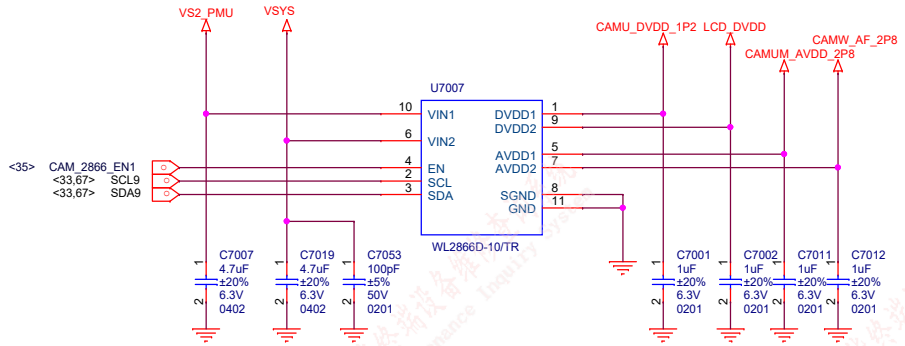

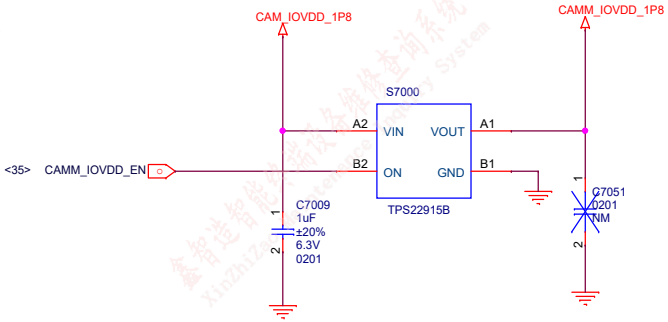

Title	<Title>
Size A3	Document Number <Doc>
Date:	Monday, March 22, 2021

Title	J11 MAIN
Size B	Document Number SIM
Date:	Monday, March 22, 2021

鑫智造智能终端设备维修查询系统
XinZhiZao Maintenance Inquiry System

Schematic design notice of "90_DEBUG_IO" page.

Note 90-1: UART Default support : UART0,
JTAG Default support : AP JTAG/MD_IO_JTAG

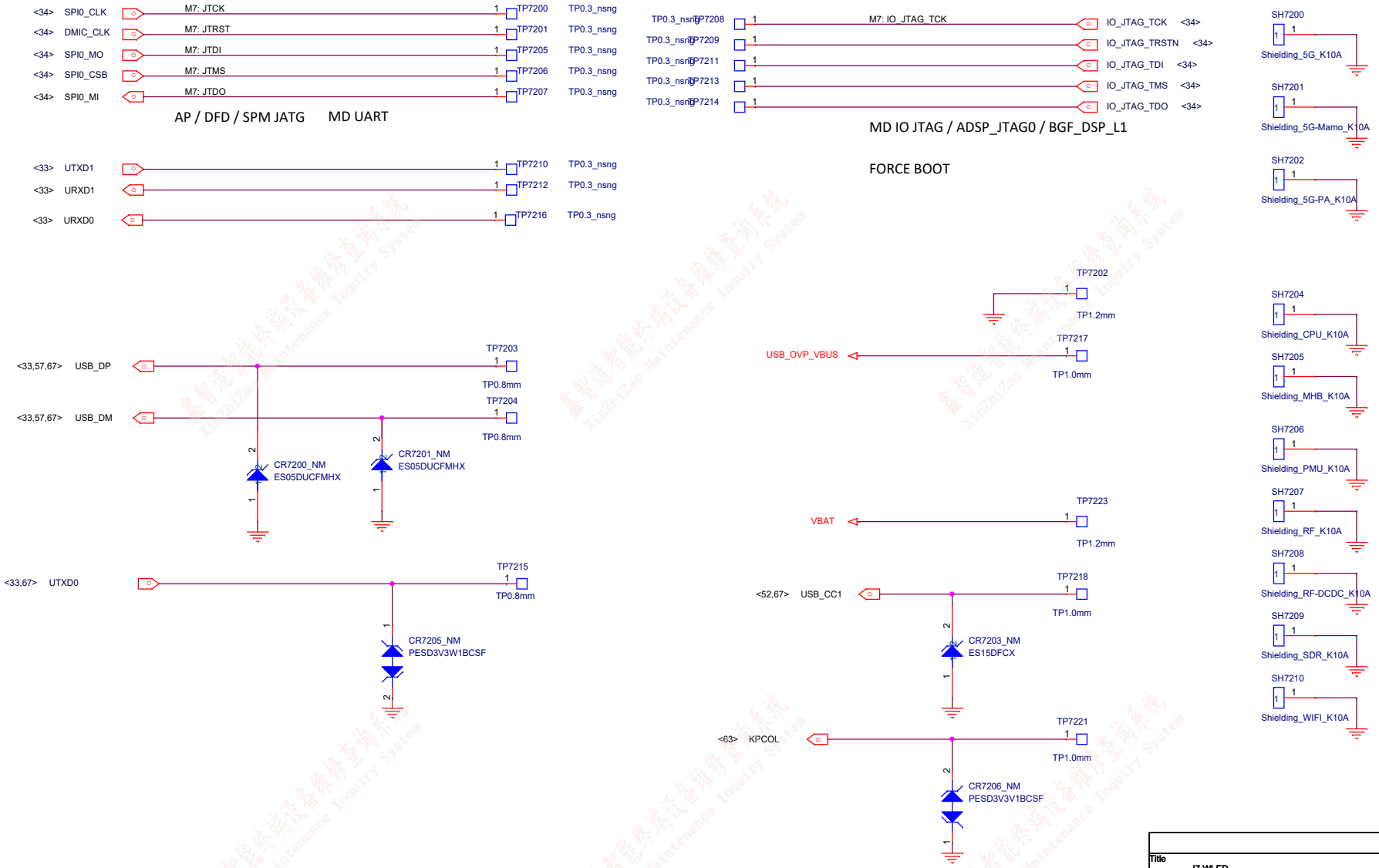

Title	J7 WLED
Size A3	Document Number <Doc>
Date:	Monday, March 22, 2021

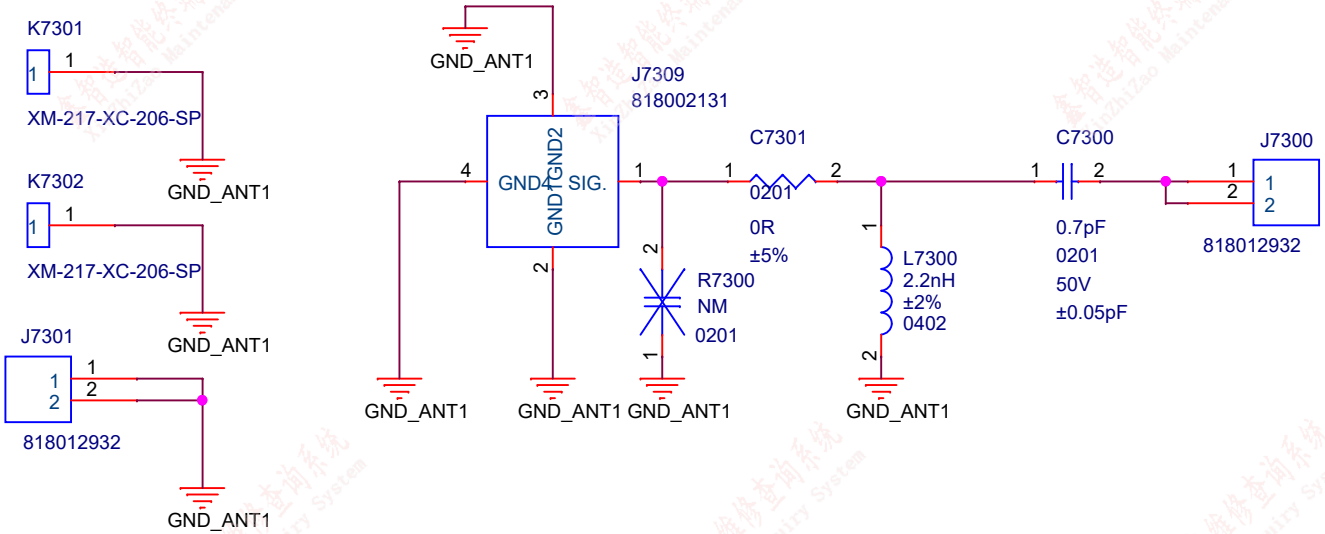

Title	<Title>
Size A	Document Number <Doc>
Date: Monday, March 22, 2021	Sheet